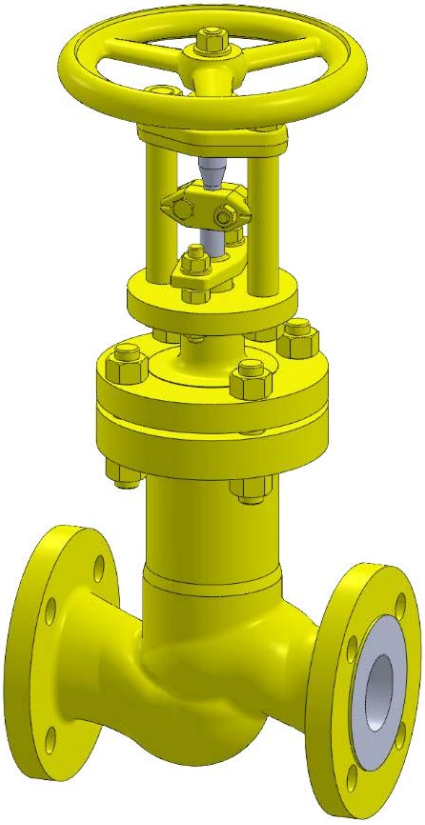

Globe Valve

Type 350EC4-5

Class 300

PHOENIX Armaturenwerke GmbH
Am Stadtbruch 6
34471 Volkmarsen

Model 350EC4-5

Straight Way / Protected Bellows

Applications & Design Features

Applications

Model 350EC4-5 is designed for critical service applications involving lethal, toxic, corrosive, inflammable, volatile, radiating, or expensive fluids.

The most common applications are

- Dry Chlorine (Cl2) liquid or gas service temperature -40°C to 120°C / -40°F to 248°F
- Anhydrous Hydrogen Chloride (HCl)
- Anhydrous Hydrofluoric acid (HF)
- Phosgene (COCl2)
- Vinyl Chloride Monomer (VCM)
- Ethylene Dichloride (EDC)
- Isocyanites (MDI, TDI, HDI, etc.) and
- fluids of similar nature.

Model 350EC4 (up to DN50/2") and 350EC5 (>DN50/2") are Euro Chlor approved for their compliance with **GEST 17/492**. Design and selected materials also meet the requirements of Chlorine Institute Pamphlet 6 Service Classes I through VI. The unique valve design guarantees reliable and excellent protection against leaks or fugitive emissions. The Stem Seal requires virtually no maintenance due to leak free weld connections of the Bellows with Bonnet and Stem. Constant packing monitoring and re-packing is eliminated. In the unlikely event of a Bellows failure the Backup Packing guarantees safe valve performance until the next scheduled shutdown. Special dual containment designs for complete valve leakage monitoring as well as designs for flow control applications with enhanced Bellows cycle life are available.

Design features

Bellows and Packing

- bellows protected in extended body against direct impingement from product flow
- multiple walls and hydroformed bellows
- up to 50.000 bellows operations guaranteed
- packing area integral with bonnet – no welded-in sleeve

Stem

- two-piece stem protects the bellows against torque stress
- design eliminates stem bearings along with their maintenance needs
- metal-to-metal back seat provides additional safety
- guided stem on top and bottom
- one-piece stem design upon request per Euro Chlor GEST 17/492 (model 350EC14-15)

Body and Bonnet

- bodies are one-piece forgings or castings with larger than required wall thickness and integral flanges
- no welds in pressure boundary
- body bonnet joint gasket is fully confined to prevent gasket flow or blowout

Seats

- solid hardfacings for outstanding corrosion and wear resistance
- knife edge metal-to-metal seat for bubble-tight shutoff
- replaceable disc for inexpensive maintenance

= zero emissions, zero seat leakage, low maintenance

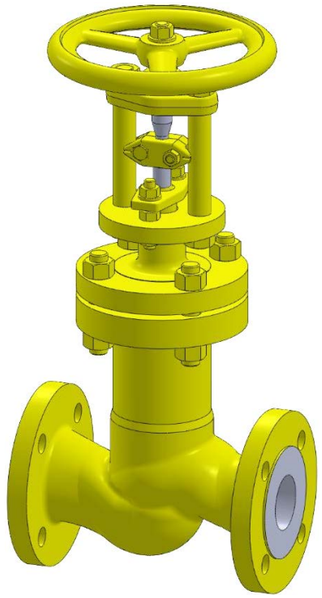

Model 350EC4-5

Straight Way / Protected Bellows

Standard Materials of Construction

Options

Other customer specific designs on request!
Other materials per customer requirements are available!

Notes

PHOENIX reserves the right to change product design and specification without notice!

t

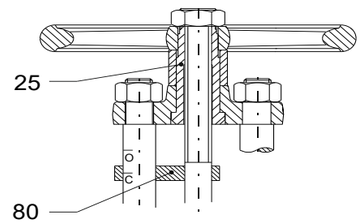

350EC14-15 / one piece stem

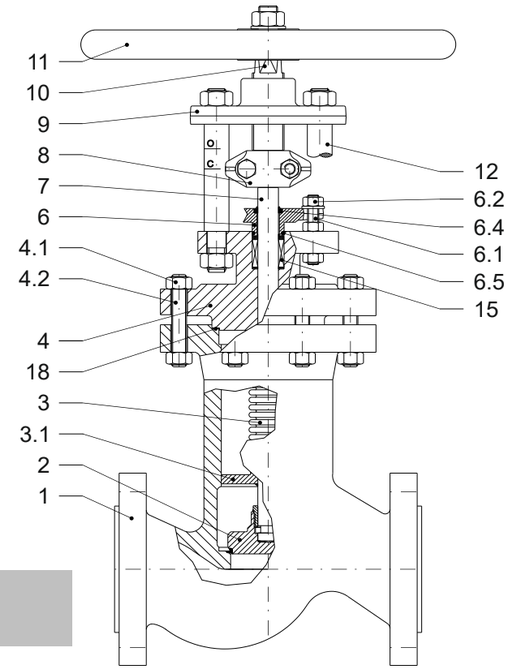

Materials

Item	Part Name	low temp. Carbon steel -50°C up to 300°C -40°F up to 248°F
1	Body	A352 LCC
	Seat overlay	Stellite 21 (≈ 32HRC)
2	Disc	AISI 316 Ti, A350 LF2 [2)]
	Overlay	Stellite 6 (≈ 42HRC)
3	Bellows	Hastelloy C-276 [1)]
3.1	Guide ring	Hastelloy C-276 [1)]
4	Bonnet	A352 LCC
4.1	Stud bolt	A320 GR. L7
4.2	Hex. nut	A194 GR.7L
6	Gland follower	A352 LC3
6.1	Stud bolt	A320 GR. L7
6.2	Hex. nut	A194 GR.7L
6.4	Wiper	EPDM
6.5	O-Ring	EPDM
7	Lower stem	A479 316Ti [2)]
8	Coupling	A351 CF8M
9	Bridge	A 105, QPQ-nitrided
10	Upper stem	AISI 431
11	Handwheel	Cast iron
12	Pillar	AISI 431
15	Packing	PTFE-rings
18	Gasket	Grooved stainless steel / PTFE
25	Bushing	A29 12L13 , QPQ-nitrided
80	Position indicator	AISI 316Ti

[1)] Trim material 1.4571 / 316Ti optional

[2)] Stem and Disc material 2.4819 / Hastelloy C-276 optional

Globe Valve *Bellows Sealed*

euro chlor 17.
Approval No. 20/01

PHÖNIX

Model 350EC4-5

Straight Way / Protected Bellows

Class 300 Sizes ½" - 14"

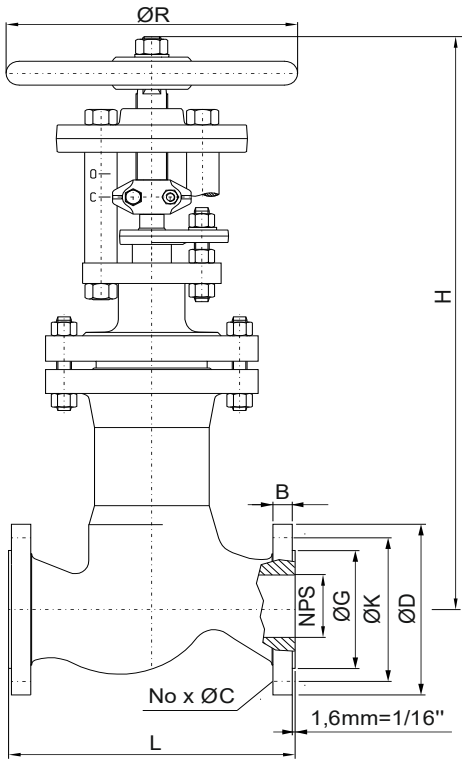

Testing / Marking

- test and design acc. to GEST 17/492
- TÜV approved strength calculation acc. to DIN EN 12516-2 available for body & bonnet
- standard tests acc. to DIN EN 12266, ISO 5208, resistance and shell strength and leak test acc. to P10 and P11
- leak test on closure acc. to P12 (leakage rate A = tight)
- ASME B16.34 / MSS SP 61 / API 598 / BS 6755

Preservation

- drying at a temperature of 120°C (248°F) for at least 3 hours
- stuffing of drying agents (Silicagel) into the valve
- blanking of inlet and outlet orifice with suitable gaskets and bolted flanges to avoid entry of moisture into the valve
- disc secured in closed position
- unfinished surfaces protected against rust
- lubrication with chlorofluorinated grease

Dimensions & Weights & Flow Coefficients

		Globe	Ball			Flage facing type RF						Kv [m³/h]
NPS	Unit	L_{RF}	L_{RF}	H	ØR	ØG	ØK	No x ØC	ØD	B	Weight	cv *[USGal/min]*
½ *	[mm]	152	140	415	150	35	67	4 x 16	95	12.7	9 kg	4
	[in]	*5.98*	*5.51*	*16.3*	*5.9*	*1.38*	*2.64*	*4 x 0.63*	*3.74*	*0.50*	*19.8 lbs*	*4.65*
¾ *	[mm]	178	152	415	150	43	83	4 x 19	117	14.2	9 kg	8
	[in]	*7.01*	*5.98*	*16.3*	*5.9*	*1.69*	*3.27*	*4 x 0.75*	*4.61*	*0.56*	*19.8 lbs*	*9.3*
1	[mm]	203	165	415	150	51	89	4 x 19	124	15.7	10 kg	11
	[in]	*7.99*	*6.50*	*16.3*	*5.9*	*2.01*	*3.50*	*4 x 0.75*	*4.88*	*0.62*	*22 lbs*	*12.79*
1 ¼ *	[mm]	on request										
	[in]											
1 ½	[mm]	229	190	460	200	73	114	4 x 22	155	19	19 kg	28
	[in]	*9.02*	*7.48*	*18.1*	*7.9*	*2.87*	*4.49*	*4 x 0.87*	*6.10*	*0.75*	*42 lbs*	*33*
2	[mm]	267	216	460	200	92	127	8 x 19	165	20.6	24 kg	47
	[in]	*10.51*	*8.50*	*18.1*	*7.9*	*3.62*	*5.00*	*8 x 0.75*	*6.50*	*0.81*	*53 lbs*	*55*
2 ½ *	[mm]	on request										
	[in]											
3	[mm]	318	282	695	250	127	168	8 x 22	210	26.9	63 kg	117
	[in]	*12.52*	*11.10*	*27.4*	*9.8*	*5.00*	*6.61*	*8 x 0.87*	*8.27*	*1.06*	*139 lbs*	*136*
4	[mm]	356	305	770	315	157	200	8 x 22	254	30.2	100 kg	179
	[in]	*14.02*	*12.01*	*30.3*	*12.4*	*6.18*	*7.87*	*8 x 0.87*	*10.00*	*1.19*	*220 lbs*	*208*
5 *	[mm]	on request										
	[in]											
6	[mm]	444	403	1005	400	216	270	12 x 22	318	35.1	205 kg	445
	[in]	*17.48*	*15.87*	*39.6*	*15.8*	*8.50*	*10.63*	*12 x 0.87*	*12.52*	*1.38*	*452 lbs*	*517*
8 *	[mm]	559	419	1165	640	270	330	12 x 25	381	39.6	400 kg	750
	[in]	*22.01*	*16.50*	*45.9*	*25.2*	*10.63*	*12.99*	*12 x 0.98*	*15.00*	*1.56*	*882 lbs*	*872*
10 *	[mm]	622	457	1355	640	324	387	16 x 28	445	46	700 kg	1100
	[in]	*24.49*	*17.99*	*53.4*	*25.2*	*12.76*	*15.24*	*16 x 1.10*	*17.52*	*1.81*	*1543 lbs*	*1279*
12 *	[mm]	711	648	1550	720	381	451	16 x 32	521	49.3	950 kg	1460
	[in]	*27.99*	*25.51*	*61.0*	*28.4*	*15.00*	*17.76*	*16 x 1.26*	*20.51*	*1.94*	*2094 lbs*	*1698*
14 *	[mm]	980	762	1590	640	413	514	20 x 32	584	52.3	1300 kg	1780
	[in]	*38.58*	*30.00*	*62.6*	*25.2*	*16.26*	*20.24*	*20 x 1.26*	*22.99*	*2.06*	*2866 lbs*	*2070*

***** these nominal sizes are not included in GEST 17/492, construction and material in acc. with GEST 17/492

- other sizes on request

Contact us

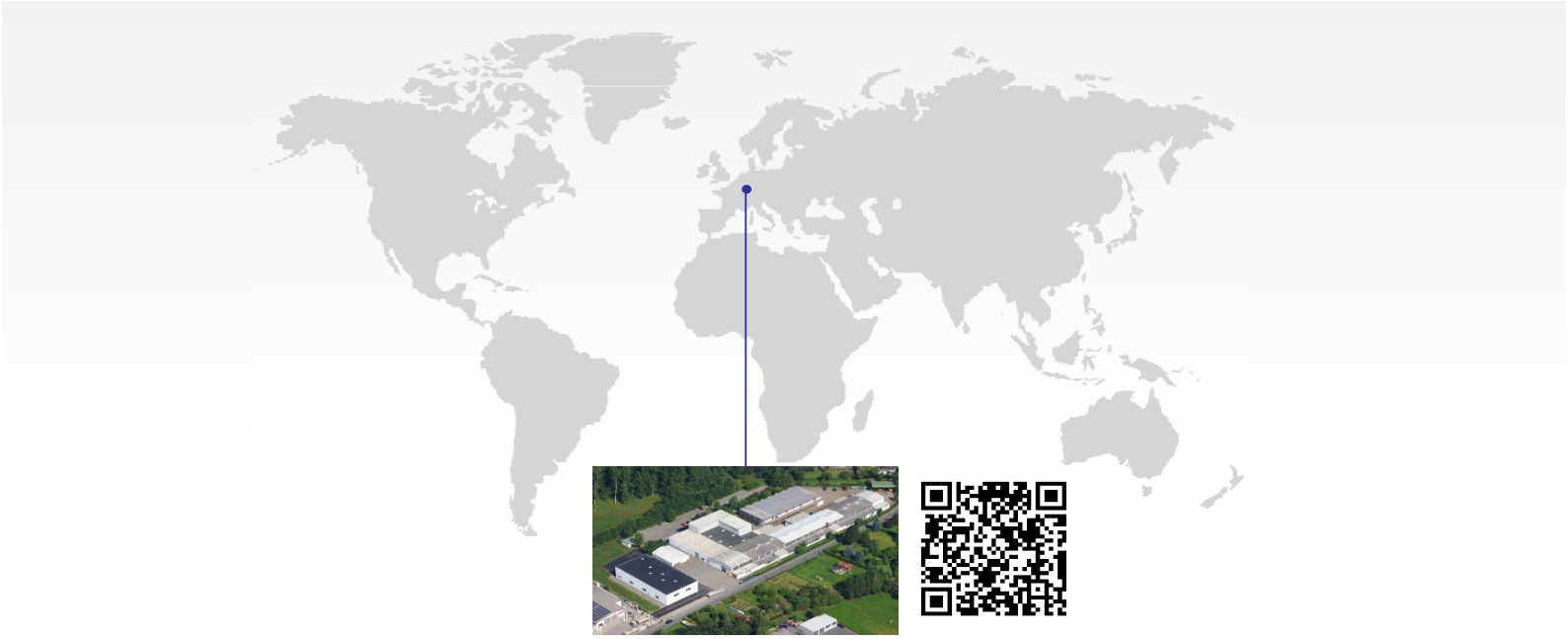

Volkmarsen, Germany

Sales and Operations

PHOENIX Armaturenwerke GmbH
Volkmarsen, Germany

Valve & Automation
Total Valve & Control Solutions®

JOHANNESBURG
Tel: 011 397 2833

DURBAN
Tel: 031 579 2593

South Africa:
0861 103 103

E-mail: sales@valve.co.za
www.valve.co.za

SCAN ME

PHÖNIX

STRACK

While this information is presented in good faith and believed to be accurate, PHOENIX Armaturenwerke GmbH, does not guarantee satisfactory results from reliance on such information. Nothing contained herein is to be construed as a warranty or guarantee, expressed or implied, regarding the performance, merchantability, fitness, or any other matter with respect to the products, nor as a recommendation to use any product or process in conflict with any patent. PHOENIX Armaturenwerke GmbH reserves the right, without notice, to alter or improve the designs or specifications of the products described herein.

© 2024 PHOENIX Armaturenwerke. All rights reserved. Specifications are subject to change without notice. All trademarks are property of their respective owners.