AUTOMATION AND DIGITALIZATION

NAF TURNEX

INSTALLTION OPERATION MAINTENANCE

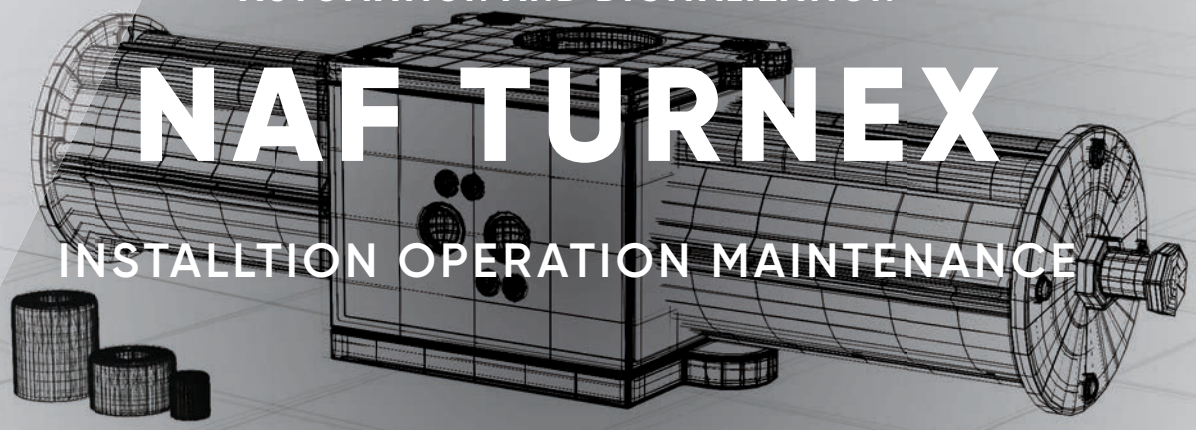

V&A

ANDRITZ

ENGINEERED SUCCESS

CONTENTS

SAFETY X

1 GENERAL X

2 LIFTING X

3 RECEIVING INSPECTION X

4 INSTALLATION X

5 COMMISSIONING X

6 MAINTENANCE X

6.1 REMOVING THE ACTUATOR FROM THE VALVE X

6.2 MAINTENANCE ACTUATOR, SIZE 0 X

6.3 MAINTENANCE ACTUATOR, SIZE 1-3 X

6.4 MAINTENANCE ACTUATOR, SIZE 4&5 X

7. ACTUATOR WITH SPRING RETURN X

8. FITTING AN ACTUATOR TO THE VALVE X

9. ACTUATOR TOPWORKS DIMENSIONS FOR ACESSORIES X

10. BILL OF MATERIALS AND RECOMMENDED SPARE PART KITS X

10.1 ORDERING OF SPARE PARTS X

10.2 BILL OF MATERIALS AND RECOMMENDED SPARE PART KITS: DOUBLE ACTING ACTUATORS X

10.3 BILL OF MATERIALS AND RECOMMENDED SPARE PART KITS: SPRING RETURN ACTUATORS X

Safety

- Assess all the risks to eliminate the risk of personal injury and material damage. Read these instructions thoroughly!
- The actuator should only be installed, operated and maintained by qualified personnel. Qualified personnel are people who on account of their education, experience, training and knowl- edge of relevant standards, specifications, accident prevention and operating conditions have been authorized by those responsible for the safety of the plant to perform the necessary work, and recognize and avoid possible dangers.
- Always use the necessary protective equipment and comply with applicable safety directives when working with hazardous or hot/cold media.
- Never operate a valve without first ensuring there is no risk of crush injuries. The risk is highest with automated valves. Take necessary safety precautions to avoid unintentional stroking of the actuator / valve.
- Never remove an actuator from a valve that is installed without ensuring that the line is free of pressure.

1. General

This instruction provides necessary information for the correct handling of the NAF Turnex actuator. For additional equipment used together with the actuator, please refer to their corresponding instructions.

Although this instruction is made to cover a broad range of varieties of the NAF Turnex, there will inevitably be versions not covered in detail. If you have any doubt about the correct use and handling of a specific version of NAF Turnex, please contact your ANDRITZ representative.

The instructions and list of spare parts in this document are applicable to NAF Turnex actuator in accordance with our Technical Bulletin.

2. Lifting

Lifting must be carried out on the valve itself or on the actuator following the method in Figure 1.

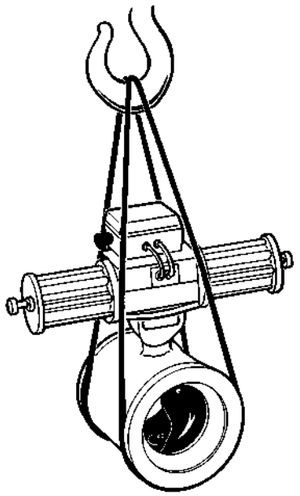

Fig.1 Lifting of the valve

3. Receiving Inspection

All actuators leaving our facility are inspected and tested in accordance with the relevant requirements or in accordance with the special provisions specified by the purchaser. Valves equipped with actuators are subjected to functional testing and are adjusted in such a manner that every unit is ready for direct installation in the pipework. However, because damage may have occurred during transport, it is advisable that receiving inspection be carried out.

We suggest the following inspection procedure:

- Check that the actuator delivered is correct in terms of type, size, equipment, etc.
- Examine the actuator, and if applicable valve and positioner for possible damage.

4. Installation

The actuator may be installed in any position. The only position we do not recommend is to install the valve with the valve stem and actuator facing downwards. In this position, the valve stem seal arrangement can be damaged by dirt in the pipeline and compromise the stem tightness over time. Any potential leakage, i.e. from the flange packings, may also damage the actuator. See fig 3.

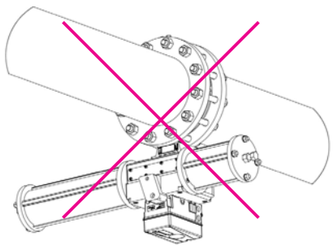

Fig. 2 – Mounting of the actuator in a position facing downwards, should be avoided.

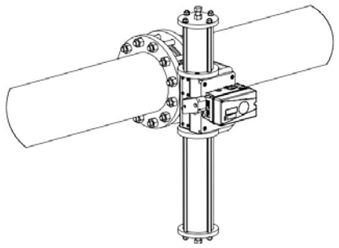

Fig. 3 – Recommended mounting direction of a spring returned actuator, spring cylinder facing downwards.

Spring return actuators, is recommended to be mounted with the spring return unit (longer cylinder), facing downwards. This will prevent any condensing water to be collecting inside the cylinder and instead be released through the filter mounted in the cylinder end. See fig 3.

5. Commissioning

Air or an inert gas must be used as the actuating medium. The air must be dried and thoroughly cleaned to prevent wear of the cylinder bores, pistons and sealing rings. Oil mist lubrication of the actuating medium is not recommended. The maximum permissible pressure of the actuating medium is 0.8 MPa (8 bar) and the maximum permissable temperature is 80°C

6. Maintenance

Many actuators are installed in locations where their performance is of critical importance to the entire process. Such actuators should be inspected regularly, and any issues should immediately be corrected.

6.1 REMOVING THE ACTUATOR FROM THE VALVE

The procedure for inspection and maintenance requires no special tools

CAUTION: Ensure the process line is shut off, free of pressure and drained of media.

1 Ensure that the recommended spare parts and gaskets for the pipe flanges are available.

2 Before removing the valve from the pipeline, operate it several times between the open and closed position to ensure that any trapped media / pressure is released.

3 Close the valve.

4 Shut off all compressed air connections and isolate all electrical connections to the actuator.

5 Disconnect all compressed air lines and electric cables connected to the actuator.

6.2 MAINTENANCE ACTUATOR SIZE 0

This section covers the maintenance information for actuator 791390-02xx with cross sectional drawing on Fig. 10.2.1

6.2.1 DISMANTLING SIZE 0

1 Release the bolts (2) and remove them together with the washers (52. The cylinder covers (1) with theirO-rings (49) can now be removed. Also remove the cylinders (3) by withdrawing them from the housing (5).

2 Remove the screws (60) form the top and underside of the actuator.

3 Then remove the cover (4) and base (70).

4 Remove either of the circlips (39) and press out the pin (10). Now lift out the entire linkage mechanism (Fig. 2) from the actuator, but don't start dismantling it just yet.

5 If the actuator has two pistons (19), fit a ring spanner to each piston nut (51), and then turn the spanners anti-clockwise until one of the nuts is released. Remove the nut, washer (50) and piston (19). Then withdraw the piston rod (17) from the actuator.

Fig. 4 – Linkage mechanism, size 0

6.2.2 INSPECTING SIZE 0

The following parts should always be replaced:

Lever bearings (8)

O-rings (36, 43, 49, 56, 58)

If the air consumption of the actuator is abnormally high, this may be due to wear of the O-ring (43). Always replace it as stated above. The following parts should also be inspected:

Cylinders (3). Clean the cylinders with white spirit and blow them dry with compressed air. Inspect the cylinder bore for scratches and other internal damage. Fit a new cylinder if the existing one is damaged. Pistons (19). Inspect the sealing lips of the piston. If these are damaged or heavily worn, fit a new piston. If one of the pistons is still on the piston rod, it can be removed by fitting two nuts to the opposite end of the piston rod (17) and locking them against one another. The inner of the two nuts can then serve as a restraint when the nut (51) at the opposite end of the piston rod is released with a ring spanner. Take care not to damage the piston rod surfaces.

Piston rod (17). If the piston rod has deep longitudinal scratches, the piston rod and piston rod bearing (16) must be replaced. However, minor scratches on the piston rod can be removed by carefully rubbing down with very fine emery cloth.

After a long period of service under difficult conditions, it may be necessary to change other component parts. Check the following: Piston rod bearing (item 16) If the internal PTFE coating is damaged so that the metal to which it has been applied is visible through the coating, fit new bearings.

6.2.3 ASSEMBLING

Grease part No. 349 06 260, which has been tested by NAF and a leading lubricant manufacturer, is recommended for all surfaces that require greasing. This grease has proved to have by far the best properties for lubricating the contact surfaces between rubber/plastic and metal. These properties include high load-bearing capacity, good adhesion, and very low stick-slip effect.

1 Make sure that all parts have been thoroughly cleaned. Wipe clean the cylinders (3), bearing surfaces of the lever (6), and other sliding surfaces.

2 If the linkage mechanism (Fig.2) has been dismantled, re-assemble it. Fit the links (13, including the bearings (12) to the lever (6) using the pins (11) and circlips (39).

3 Grease the O-rings (36) and fit them onto the lever (6).

4 Grease the O-rings (43) and fit them into the seal holders (44).

5 Rub a thin layer of grease onto the piston rod (17). Carefully push the piston rod into the bearing (16), past the O-ring (43) and out through the corresponding bearing on the other side of the housing.

CAUTION: The location of the hole in the piston rod is not symmetrical. The side of the piston rod which is longer (from the hole to the end) should be located on side B.

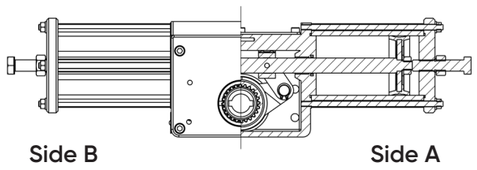

6. Coat the lips of the piston (19) with a thin film of grease, and make sure that the groove between the lips is filled with grease. Fit the pistons to the piston rod (17) with the rubber coated side facing the nut. Apply locking compound to the piston rod thread. Fit the washer (50) and nut (51). When the pistons have been fitted, tighten the nuts simultaneously to the torque specified in Table 1.

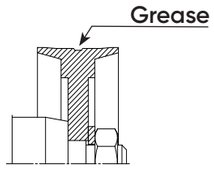

7 Place the linkage mechanism. Fit one of the circlips (39) to the pin (11). Then push the pin in through the links (13) and piston rod (17) and lock the pin with the other circlip (39).

8 Fit the lever bearings (8) into the cover (4) and base (70). The easiest procedure for fitting the bearings is by using a press or a vice.

9 Apply a little medium-strenght locking compound into the tapped holes and use the screws (60) to secure the cover (4) and base (70). See Table 1

N.B. Fit the cover and base as shown in Fig. 11.2.1, so that the linkage mechanism will open in the right direction.

10 Grease the O-rings (49, 43) and fit them into the seal holder (44) and housing (5) respectively. Two of the O-rings (49) will be left over and can then be used in the cylinder cover (1).

11 Apply a thin coat of grease to the surfaces of the cylinders (3). Work the grease into the whole of the sliding surface by means of a clean piece of lint-free linen cloth. Carefully push the cylinders onto the pistons.

12 Fit the remaining two O-rings (49) into the cylinder covers (1) and place the covers on the cylinders. Apply a little medium-strength locking compound into the M6 tapped holes at the housing (5). Fit the washers (52) and bolts (2). Tighten the bolts in diagonally opposite pairs (see Table 1). The tightening torque corresponds to tightening the bolts by hand until they come into contact with the end cover, and then tightening about a further quarter of a turn.

CAUTION: It is important not to overtighten the bolts since the tapped holes in the housing may otherwise be damaged

13 Adjust the end-stop bolt (20) to the required end position.

6.3 MAINTENANCE ACTUATOR SIZE 1-3

6.3.1 DISMANTLING SIZE 1-3

1. Release the nuts (53) and remove them together with the washers (52). The cylinder covers (1), cylinders (3) and O-rings (49) can now be removed.

2. Remove the screws (60) from the top of the actuator. Then remove the cover (4).

3. Rotate the threaded pin (10), and then withdraw it straight out of the coupling (15).

4. If the actuator has two pistons (19), fit a ring spanner to each piston nut (51), and then turn the spanners anti-clockwise until one of the nuts is released.
   Remove the nut, washer (50) and piston (19). Then carefully withdraw the piston rod (17) from the actuator.

5. The linkage mechanism (Fig. 3) can now be lifted out of the actuator. Further dismantling of the linkage mechanism is not normally necessary.

Fig. 5 – Linkage mechanism, size 1-3

6.3.2 DISMANTLING SIZE 1-3

The following parts should always be replaced:

Lever bearings (8)

O-rings (36, 49, 56, 58)

If the air consumption of the actuator is abnormally high, check the following parts:

Cylinders (3). Clean the cylinders with white spirit and blow them dry with compressed air. Inspect the cylinder bore for scratches and other internal damage. Fit a new cylinder if the existing one is damaged.
Pistons (19). Inspect the sealing lips of the piston. If these are damaged or heavily worn, fit a new piston.

If one of the pistons still remains on the piston rod, it can be removed by fitting two nuts to the opposite end of the piston rod (17) and locking them against one another. The inner of these two nuts can then serve as a restraint when the nut (51) at the opposite end of the piston rod is released with a ring spanner. Take care not to damage the piston rod surfaces.

Piston rod seals (43). Inspect these for damage or find out whether the piston rod (17) moves very freely in the seals. If the seals are damaged or leaking, fit new seals.

Piston rod (17). If the piston rod has deep longitudinal scratches, a new piston rod must be fitted. Minor scratches can be removed by carefully rubbing down with very fine emery cloth.

6.3.3 ASSEMBLING SIZE 1-3

1 Make sure that all parts have been thoroughly cleaned. Wipe clean the cylinders (3), bearing surfaces of the lever (6), and other sliding surfaces.

2 If the linkage mechanism (Fig. 3) has been dismantled, re-assemble it. Fit the links (13) to the coupling pins (15). Then fit the circlips (33) and assemble the links with the lever (6) and pins (11).
Finally, fit the circlips (39).

3 Grease the bearings (8) and O-rings (36). Fit them into the housing (5) and cover (4), and to the lever (6). Fit the linkage mechanism into the housing. Make sure that the lever is fitted with the milled driver grooves facing upwards (towards the cover 4), and that the mounting plate on the coupling (15) faces outwards towards the window (68).

4 Rub a thin film of grease onto the surface of the piston rod (17). Carefully push the piston rod past the piston rod seal (43), through the bearing (16), coupling (15) and out through the opposite bearing and seal.

CAUTION: The location of the hole in the piston rod is not symmetrical. The side of the piston rod which is longer (from the hole to the end) should be located on side B.

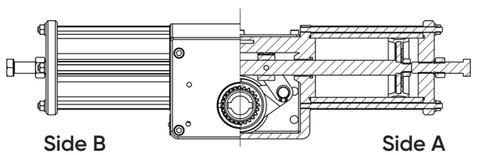

5 Coat the lips of the pistons (19) with a thin film of grease, and make sure that the groove between the lips is filled with grease (Fig. 9). Fit the pistons to the piston rod (17), with the rubber-coated side facing the nut. Apply locking compound to the piston rod thread. Fit the washer (50) and nut (51). After the pistons have been fitted, tighten the nuts.

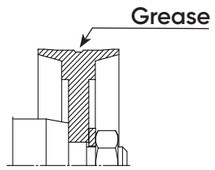

6 Align the hole in the piston rod (17) with the hole in the coupling (15). Apply some anti-galling agent to the unthreaded part of the pin (10), and then fit the pin into the coupling.
The pin should enter easily into the hole. Never use force. It may sometimes be necessary to rotate the piston rod through half a turn. Tighten the pin to the torque specified in Table 1.

7 Fit all the tie rods (2).

8 Grease the O-rings (49, 58), and fit two of the O-rings (49) and both O-rings (58).

9 Apply a thin film of grease to the surfaces of the cylinders (3) and use a clean piece of lint-free linen cloth to work the grease into the whole of the sliding surface. Carefully push the cylinders onto the pistons.

On actuator size 1, the cylinders on sides A and B are different.

10 Fit the O-rings into the cylinder covers (49) and fit the cylinder covers to the cylinders. Then fit the washer (52) and nuts (53) to the tie rods and tighten the nuts in diagonally opposite pairs to the torque specified in Table 1.

11 Fit the cover (4). Apply a little locking compound to the threads of the screws (60) and tighten the screws to the torque specified in Table 1.

12 Adjust the end-stop bolts (20) to the required end positions.

Part	Actuator size			
	0	1	3	4
Piston rod nut (51)	14	29	50	115
Pin (10)	-	7	50	115
Tie-rod nut (53)	-	7	35	35
Locking screw (60)	17	7	17	17

Table 1. Tightening torques, Nm, for the bolts and nuts of the actuator

6.4 MAINTENANCE ACTUATOR SIZES 4 & 5

6.4.1 DISMANTLING SIZES 4 & 5

1 Release the nuts (53) and remove them together with the washers (52). The cylinder covers (1), tie rods (2), cylinders (3) and O-rings (49) can now be removed.

2 Remove the locking screws (60) and remove the cover (4).

3 Release the locking links as shown in Fig. 1.4 by pressing apart the locking clip (34) by means of circlip pliers, and withdraw the pins (11) by means of a screw (M5/M8) screwed into them.

4 Turn the links so that the lever lugs are exposed and lift out the lever.

5 If the actuator has two pistons (19), fit a ring spanner to each of the piston nuts (51) and then turn the spanners anti-clockwise until one of the nuts is released. Remove the nut and the piston.

CAUTION: Never use the piston or piston rod as restraint for releasing the other piston unit. Take a slit nut instead (with a slit width of 2-3 mm) and screw it onto the free end of the piston rod. Grip the slit nut with the pipe

Take care not to scratch the piston rod. Scratches could cause damage to the piston rod seal.

6 If the actuator has only one piston, remove the piston nut by means of a slit nut as described above.

7 Remove the screws (41) from the coupling (15).

8 Pull away the coupling retainer (15.1) and remove the locking segments (40). Carefully withdraw the piston rod

9 (17) from the seal holders (44), coupling (15) and coupling retainer (15.1).

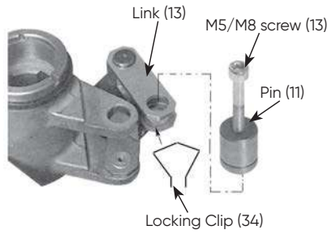

Fig. 6 – Linkage mechanism, size 4-5

6.4.2 INSPECTING SIZES 4 & 5

The following parts should always be replaced:

Lever bearings (8)

O-rings (36, 49, 56, 58)

If the air consumption of the actuator is abnormally high, check the following parts:

Cylinders (3). Clean the cylinders with and inspect the cylinder bore for scratches and other internal damage. Fit a new cylinder if the existing one is damaged. Lever bearings (8) Clean the bearings and fit new bearings if there is play in the existing bearings. Inspect the O-rings (36). Fit new O-rings if necessary. Grease the O-rings and bearings surfaces. Re-assemble.

Pistons (19). For size 4: Inspect the sealing lips of the piston. If these are damaged or heavily worn, fit a new piston. If one of the pistons still remains on the piston rod, it can be removed by fitting two nuts to the opposite end of the piston rod (17) and locking them against one another. The inner of these two nuts can then serve as a restraint when the nut (51) at the opposite end of the piston rod is released with a ring spanner. Take care not to damage the piston rod surfaces.

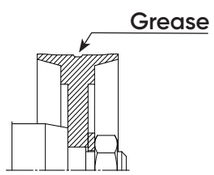

Pistons (19). For size 5: Inspect the piston guide ring (29) and faced O-ring (30). Fit new rings if the existing ones are scratched or have damaged edges or if they are heavily worn. If no damage is visible, test the outside dimensions of the sealing ring by threading the cylinder onto the piston. If this is easy to do without significant resistance, this indicates that the O-ring and guide ring are heavily worn and new ones must be fitted. Remove the old O-ring and guide ring. Mount the new guide ring (29) and O-ring (30). The guide ring (29) consists of two bearing strips that makes the full circumference, add some grease in the groove to make the strips stay in place.

Piston rod seals (16). Inspect these for damage or find out whether the piston rod (17) moves very freely in the seals. If the seals are damaged or leaking, fit new seals.

Piston rod (17). If the piston rod has deep longitudinal scratches, a new piston rod and piston rod bearings (16) must be fitted. Minor scratches can be removed by carefully rubbing down the piston rods with very fine emery cloth.

After a long period of service under difficult conditions, it may be necessary to change other component parts. Check the following:

Piston rod bearings (16). If the internal PTFE coating is damaged so that the metal to which it has been applied is visible through the coating, fit new bearings.

Linkage mechanism - Fig. 1.4 This consists mainly of pins, links, lever and coupling. If play can be felt in the mechanism or if there is reason to suspect that some part may be damaged, the mechanism should be dismantled.

Remove the circlips (39 and and locking clip 34). The pins and links can now be removed.

Now check the following parts:

Pins (11). If these are damaged or heavily scratched, fit new pins. Minor scratches can be removed by rubbing down with very fine emery cloth.

Links (13). The link includes bearing (14) of Glacier manufacture. If the internal PTFE coating is damaged so that the metal to which it has been applied is visible through the coating, fit new bearings.

Lever (6). The lever includes two bearings (12) of Glacier manufacture. If the internal PTFE coating is damaged so that the metal to which it has been applied is visible through the coating, fit new bearings.

The coupling (15). Check the pins of the coupling. If these are damaged or heavily scratched, a new coupling must be fitted. Minor scratches can be removed by rubbing down with very fine emery cloth.

6.4.3 ASSEMBLING SIZES 4 & 5

1 Make sure that all parts have been thoroughly cleaned. Wipe clean the cylinders (3), bearing surfaces of the lever (6), and other sliding surfaces.

2 If the linkage mechanism (Fig. 1.4) has been dismantled, re-assemble it. Fit the links (13) to the coupling pins (15). Then fit the circlips (39) and assemble the links with the lever (6) and pins (11). Finally, fit the locking clips (34).

3 Grease the bearings (8) and O-rings (36). Fit them into the housing (5) and cover (4), and to the lever (6). Fit the linkage mechanism into the housing. Make sure that the lever is fitted with the milled driver grooves facing upwards (towards the cover 4).

Rub a thin film of grease onto the piston rod (17). Carefully push the piston rod past the piston rod seal (43), through the bearing (16), the coupling (15) and coupling retainer (15.1) and out through the opposite bearing and seal.

4 For actuator size 4: Coat the lips of the pistons (19) with a thin film of grease, and make sure that the groove between the lips is filled with grease.

For actuator size 5: Coat the faced O-ring (30) on the pistons (19) with a thin film of grease.

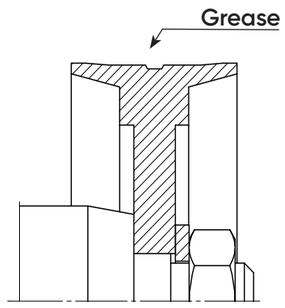

5 Fit the piston to the piston rod (17) with the chamfered recess side towards the nut. Apply some locking compound to the piston rod thread. Fit the nut (51). After the pistons have been fitted, tighten the nuts simultaneously to the torque specified in Table 2.

6 Add the locking segments (40) between coupling (15) and coupling retainer (15.1), Screw together the coupling and coupling with screws (41).

Part	Actuator size	
	4	5
Piston rod nut (51)	400	800
Tie-rod nut (53)	35	60
Locking screw (60)	20	40

Table 2. Tightening torques, Nm, for the bolts and nuts of the actuator.

7 Grease the O-rings (49) and fit the rings into the groove in the housing (5) and cylinder cover (1).

8 Fit the tie rods (2).

9 Apply a thin film of grease to the surfaces of the cylinders (3), and use a piece of clean, lint-free linen cloth to work the grease into the whole of the sliding surfaces. Carefully push the cylinders onto the pistons.

10 Fit the cylinder cover (1).

11 Fit the washers (52) and Nuts (53) and tighten them in diagonally opposite pairs to the torque specified in Table 2.

12 Adjust the end stop bolts (20) to the required end positions.

6.5 ACTUATOR SIZE 45

Actuator size 45 is designed based on the size 4 while one piston is changed to size 5.

7. Actuator with spring return

The spring-return actuator is basically a double- acting actuator in which one of the cylinders has been replaced by a return spring cylinder. Double- acting actuators can thus easily be converted to spring-return actuators and vice versa.

CAUTION: The spring-return cylinder contains one or more preloaded springs. To avoid the risk of injuries, handling and dismantling must be carried out in accordance with the instructions below.

7.1 DISMANTLING AND ASSEMBLING THE SPRING-RETURN UNIT

If the air consumption of the spring cylinder in size 0 and 1-3 actuators is abnormally high, it may be necessary to dismantle the spring-return unit to replace the sealing ring.
The spring-return unit in sizes 4-5 actuators need not normally be dismantled. However, if this should be necessary for any reason, we would advise you to consult NAF.

The equipment shown in Fig. 7 is necessary for unloading or preloading the springs to enable the spring return unit to be dismantled and assembled. Table 3 shows the compression force, free height and preloading travel necessary. In addition, the tool shown in Fig. 13 is necessary for fitting the piston into the spring-return unit in size 1-3 actuators

Spring-return	Compression force	Free height	Preloading travel
unit	N	L, mm	Lf, mm
0	750	250	85
1	1200	350	110
2	3100	505	185
3	7900	645	195

Table 3. Assembly particulars for each size of spring-return unit

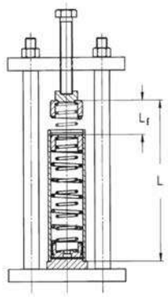

Fig. 7 – Spring unloading tool

The spring-return unit in sizes 4-5 actuators need not normally be dismantled. However, if this should be necessary for any reason, we would advise you to consult NAF.

7.2.1 TO DISMANTLE THE SPRING-RETURN UNIT SIZE 0-3

Sizes 0 and 1-3

1 Remove the end stops (20, 56, 57, 96) on both sides of the actuator.

Removing of the endstops must be done to ensure that any preloading which may remain in the spring will not project the spring cylinder and thus cause damage or injury.

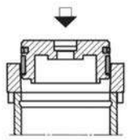

Fig. 8 – Assembly

2 Release the nuts (53) in diagonally opposite pairs at the spring cylinder. However, leave all nuts in position until all spring load has been relieved. Then remove the nuts and the end cover (92).

3 Back off the long piston nut (47) about two turns. Place a sturdy metal drift against the long piston rod nut (47) and hammer the drift until the piston rod is released from the piston in the cylinder. Unscrew the piston rod nut. The spring cylinder can now be removed.

CAUTION: Make sure that the spring cylinder does not point towards any person, since it contains preloaded springs.

4 Secure the spring-return unit in the spring unloading tool (Fig. 7). The spring guide (26) should be in contact with the push-rod of the tool. If necessary, place a protective plate under the push-rod.

CAUTION: It is essential to secure the spring-return unit in the tool so that it is perfectly vertical and so that it will not become misaligned due to possible transverse forces from the spring.

5 Press the spring guide (26) and springs (25) into the cylinder (24), so that the entire locking ring (27) is exposed.

6 Carefully remove the locking ring (27) without damaging it.

7 Unload the spring completely. Remove the spring guide (26) and the springs (25). Take care not to damage the cylinder bore.

8 Remove the cylinder from the tool and carefully remove the remaining locking ring (27). Then push the piston out from this side.

9 Clean the various parts and inspect them from wear. The part of the cylinder bore which is in contact with the piston must be free from scratches, although minor scratches are permissible on the part of the cylinder bore around the spring.

7.2.2 ASSEMBLING THE SPRING-RETURN UNIT SIZE 0-3

1 Clean all parts and grease the cylinder bore (see section 2.5 for particulars of the recommended grease), using a piece of lint-free linen cloth.

2 Fit a new spring piston assembly (21, 22, 23). For sizes 1-3, the special tool shown in Fig. 7 which serves as a "shoe horn" is necessary for assembly. The best results will be achieved by replacing the entire spring piston. If only the faced O-ring (23) is replaced, first carefully remove the old ring and then thoroughly clean the groove. Then place the sliding part of the ring in water at 60°C for 3-4 minutes.

During this time, fit the O-ring into the groove. Then firmly grip the sliding part of the ring, and quickly prise it over the guiding edge of the piston. Bear in mind that if the ring is stretched too far, it may remain permanently deformed.

3 Fit the locking ring (27) into the groove in the cylinder, and then push the spring piston against it so that the locking ring will be locked by the piston (see Fig. 7).

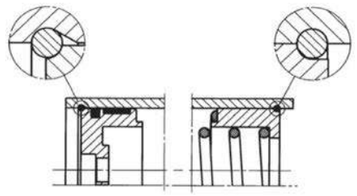

Fig. 9 – Position of locking ring

4 Insert the springs (25) into the cylinder so that their ends fit into the grooves on the inside of the spring piston. Take care not to damage the cylinder bore.

5 Place the unit in the spring unloading tool shown in Fig. 7.

It is essential to secure the spring-return unit in the spring unloading tool so that it is perfectly vertical, to prevent it from becoming misaligned due to possible transverse forces from the spring.

6 Place the spring guide (26) on the ends of the springs. If necessary, place a protective plate under the push- rod, and then press down the spring guide so that the entire locking groove is exposed.

7 Fit the locking ring (27) into the locking groove in the cylinder and then reduce the load very gradually until the locking ring has gripped the spring guide (see Fig. 9). Make sure that the spring guide is not misaligned in the cylinder.

8 Release the spring unloading tool entirely and remove the unit from the tool.

9 Then fit the spring-return unit to the actuator.

10 Check that the warning plate is fitted to the cylinder and is fully readable. If necessary, fit a new warning plate.

7.3.1 DISMANTLING THE SPRING-RETURN UNIT SIZE 4

1 If possible, place a spring-return actuator with the spring cylinder pointing upwards. Back off the nuts (53) gradually one turn at a time until all studs have been entirely relieved of load.

2 Withdraw the spring cylinder (24) straight up.

3 Remove the spring assembly.

WARNING: Do not dismantle the spring assembly. Special equipment is necessary for this purpose.

The spring assembly consists of springs, spring guide and guide rails which together form a preloaded spring assembly. If the assembly must be dismantled for any reason, get in touch with NAF.

4 Inspect the piston and its guide ring (22) and O-ring (23).

7.3.2 ASSEMBLING THE SPRING-RETURN UNIT SIZE 4

1 Fit the spring assembly.

2 Push the cylinder into place.

3 Screws on the studs (91) with the nut sleeves (53) and tighten them alternately one turn at a time. Finally tightening them to the torque specified in Table 3.

7.4 DISMANTLE AND ASSEMBLE THE SPRING- RETURN UNIT SIZE 5

CAUTION: The spring cylinder contains preloaded springs that can be released if not disassemblied correctly Consult NAF if the spring return unit must be dismantled.

8. Fitting an Actuator to the Valve

1 Fit the actuator to the valve. Ensure that both the valve and the actuator are in the closed position before fitting the actuator. The valve is in the closed position when the keys in the stem face in the direction of flow. (An actuator which uses compressed air to close the valve and a return spring to open the valve should be fitted with the actuator and valve in the open position.)

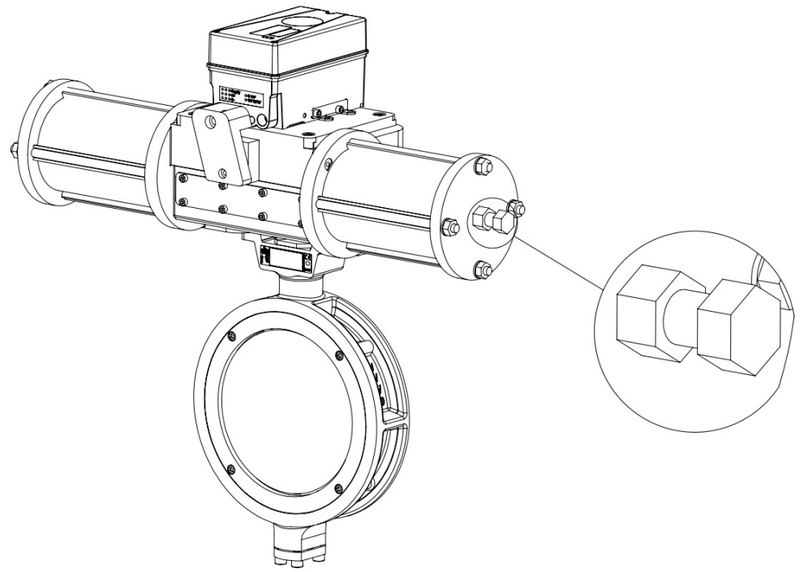

Figure 10 – Highlighted stop screw (right side) adjusts closed position of the actuator

9 Actuator topworks dimensions for accessories

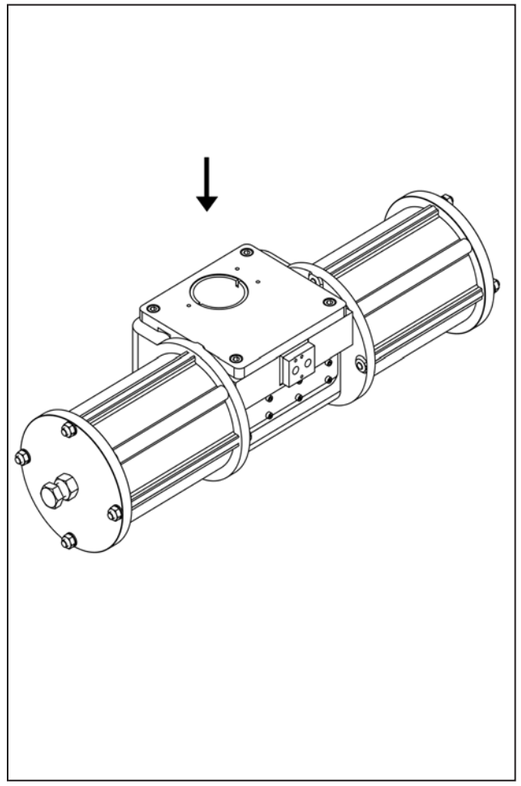

Groove dimensions

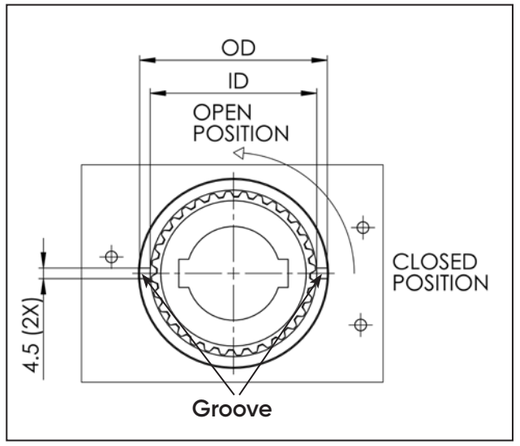

Actuator Size	Id (ø)	Od (ø)	Groove depth
0	38,5	47	8
1	40,5	47	8,5
2	59	70	8,5
3	71	80	8,5
4	80	100	6
45	80	100	6
5	80	100	6

Thread patterns and dimensions

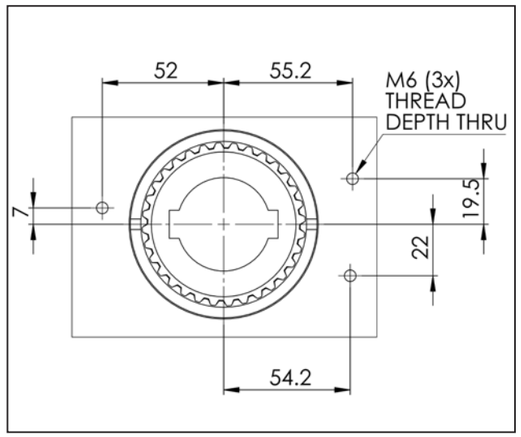

Actuator Size 0-3

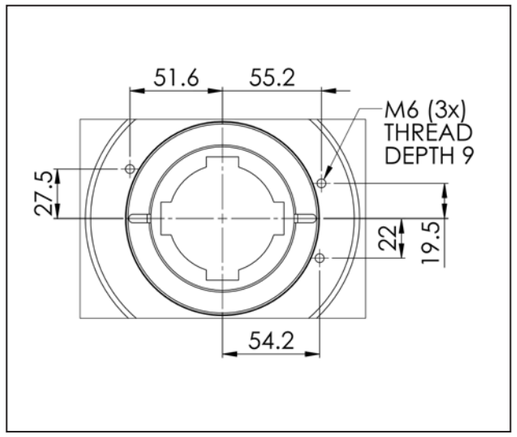

Actuator Size 4 & 5

10. Bill of Materials and recom- mended spare part kits

10.1 ORDERING OF SPARE PARTS

When placing an order for spare parts, specify:

- NAF-No: specified on the identification plate of the actuator.
- Recommended spare part kit according to Section 10.2-10.3.
- Quantity required.

ORDERING EXAMPLE

Product code (1)	791292-32
Batch/Series number (2)	164035-04
Spare part kit	A
Quantity	1pcs

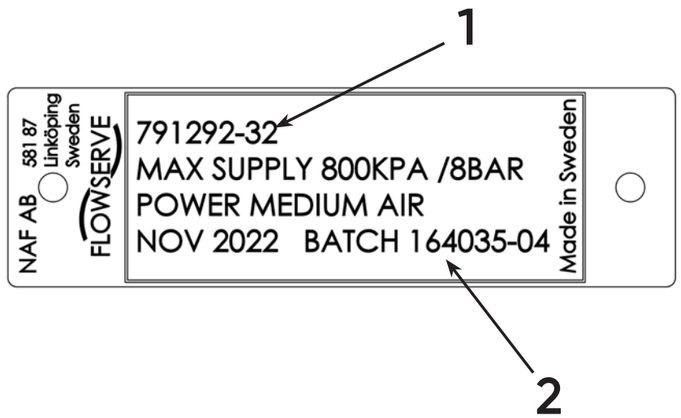

10.2 BILL OF MATERIALS AND RECOMMENDED SPARE PART KITS DOUBLE ACTING ACTUATORS

10.2.1 ACTUATOR 791390-02XX

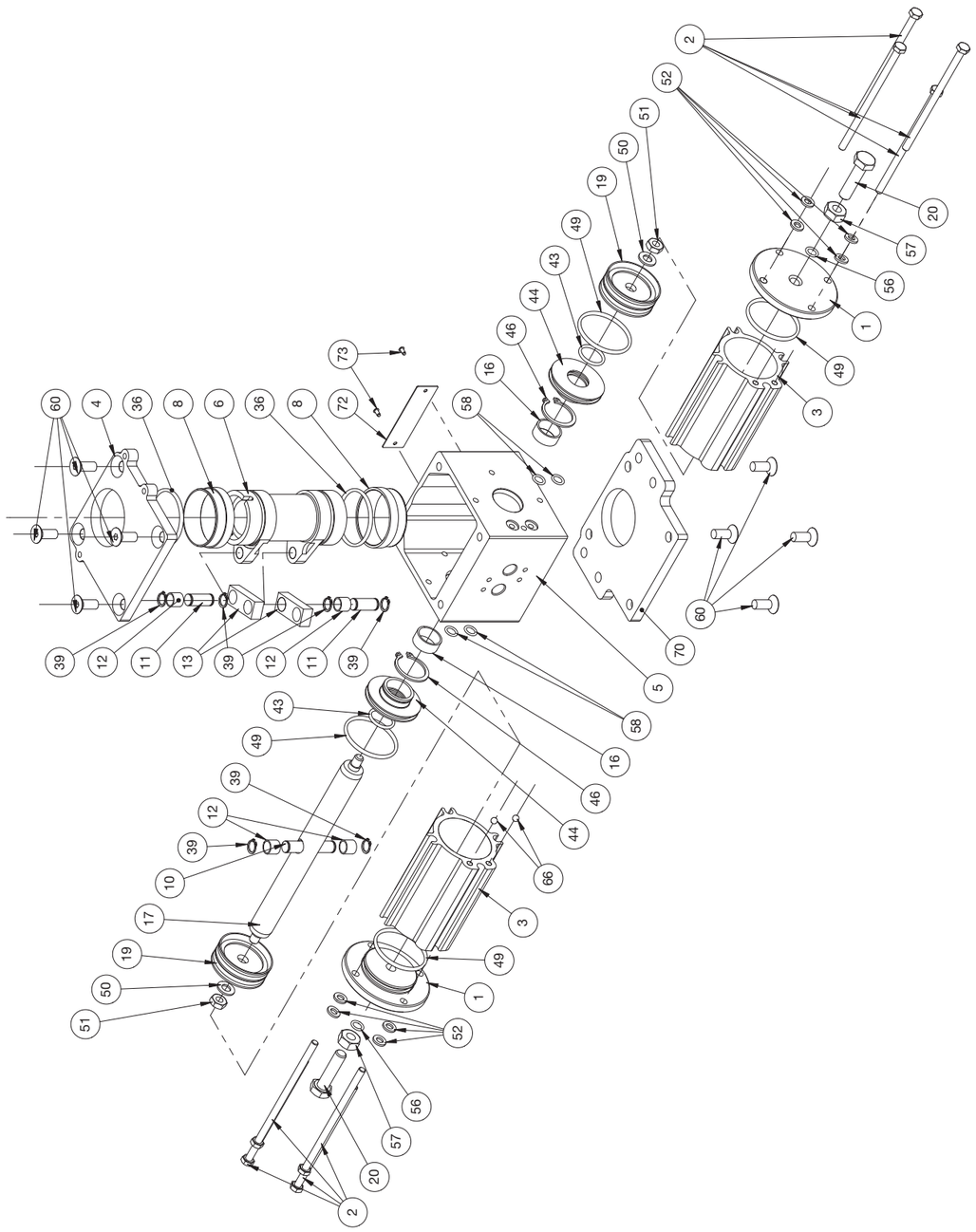

BILL OF MATERIAL AND RECOMMENDED SPARE PARTS KITS FOR ACTUATOR 791390-02XX

Item no	Description	Qty	Kit A	Kit B	Kit C
1	Cylinder cover	2			1
2	Screw	8			4
3	Cylinder	2			1
4	Cover	1			
5	Housing	1			
6	Lever	1			
8	Bearing for lever	2	2	2	
10	Pin	1		1	
11	Pivot pin	2		2	
12	Pivot pin bearing	4		4	
13	Link	2		2	
16	Bearing for piston rod	2		2	
17	Piston rod	1			
19	Piston	2	2	2	
20	Stop screw	2			1
36	O-ring	2	2	2	

Item no	Description	Qty	Kit A	Kit B	Kit C
39	Circlip	6		6	
43	Piston rod sealing	2	2	2	
44	Seal holder	2		2	
46	Circlip	2		2	
49	O-ring	4	4	4	2
50	Washer	2			
51	Nut	2			
52	Washer	8			4
57	Nut	2			1
56	O-ring	2	2	2	1
58	O-ring	4	4	4	
60	Screw	8		8	
70	Base plate	1			
72	Name plate	1			
73	Rivet	2			

Complete service kit: (kit A): Recommended parts to be replaced during normal maintenance
Complete overhaul kit: (kit B): Recommended parts to be replaced at a complete overhaul
Complete cylinder: (kit C): Replacement of damaged cylinder, (piston not included)

10.2.2 ACTUATOR 791290-12XX

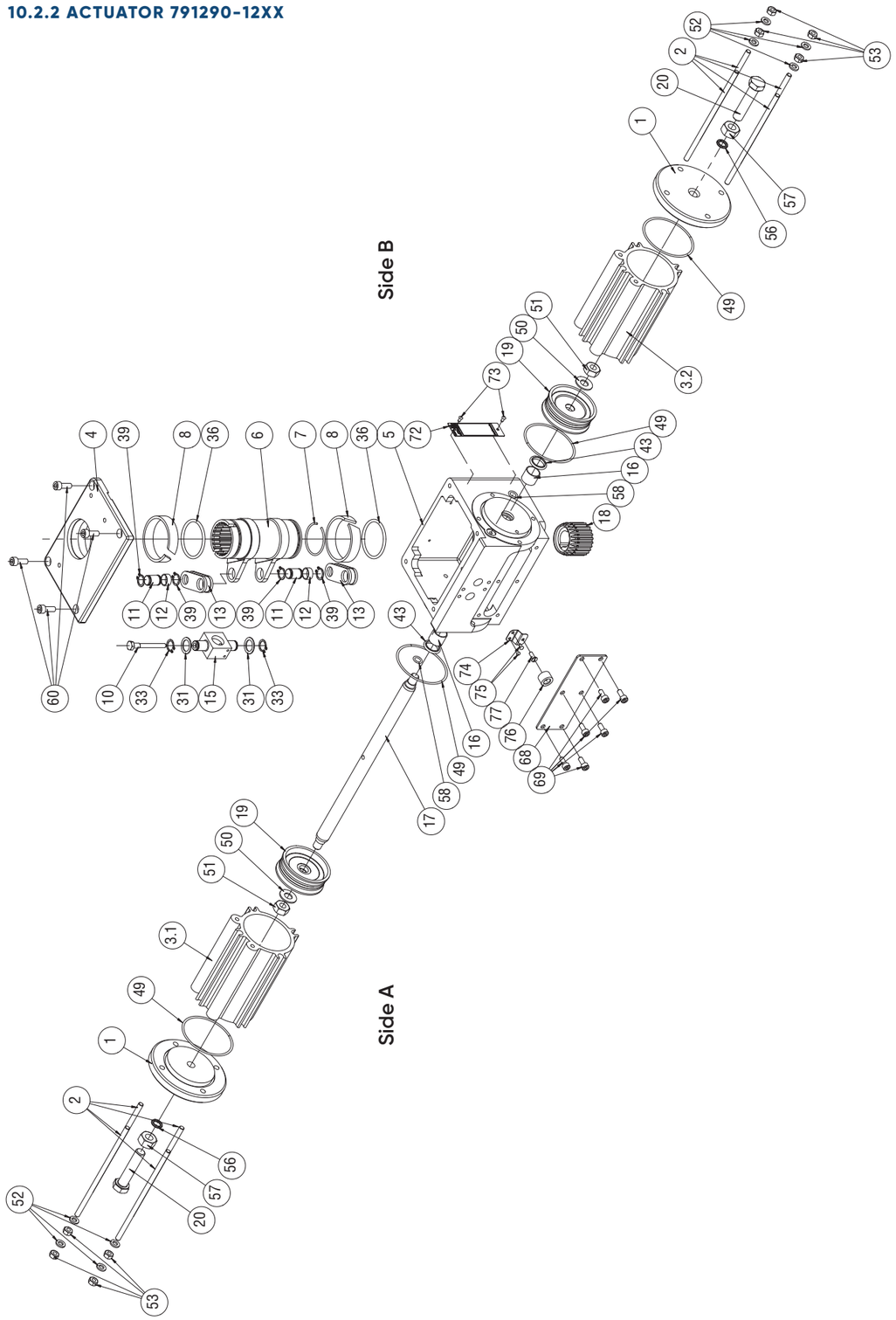

BILL OF MATERIAL AND RECOMMENDED SPARE PARTS KITS FOR ACTUATOR 791290-12XX

Item no	Description	Qty	Kit A	Kit B	Kit C	
					Side A	Side B
1	Cylinder cover	2			1	w
2	Tie rod	8			4	4
3.1	Cylinder	1			1	
3.2	Cylinder	1				1
4	Cover	1				
5	Housing	1				
6	Lever	1				
7	Circlip for sleeve	1				
8	Bearing for lever	2	2	2		
10	Pin	1		1		
11	Pivot pin	2		2		
12	Pivot pin bearing	2		2		
13	Link incl. Bearing	4		2		
15	Coupling	1				
16	Bearing for pis- ton rod	2		2		
17	Piston rod	1				
18	Sleeve					
19	Piston	2	2	2		
20	Stop screw	2			1	1
31	Washer	2		2		
33	Circlip	2		2		

Item no	Description	Qty	Kit A	Kit B	Kit C	
					Side A	Side B
36	O-ring	2	2	2		
39	Circlip	4		4		
43	Piston rod sealing	2	2	2		
49	O-ring	4	4	4	2	2
50	Washer	2				
51	Nut	2				
52	Washer	8			4	4
53	Nut	8			4	4
56	O-ring	2	2	2	1	1
57	End stop nut	2	2	1	1	1
58	O-ring	2	2	2		
60	Screw	4		4		
68	Window	1				
69	Screw	6				
72	Name plate	1				
73	Rivet	2				
74	Mounting plate	1				
75	Rivet	2				
76	Sensor body	1				
77	Screw	1				

Complete service kit, (kit A): Recommended parts to be replaced during normal maintenance
Complete overhaul kit, (kit B): Recommended parts to be replaced at a complete overhaul
Complete cylinder, (kit C, side A): Replacement of damaged cylinder, (piston not included)
Complete cylinder, (kit C, side B): Replacement of damaged cylinder, (piston not included)

10.2.3 ACTUATOR 791290-22XX

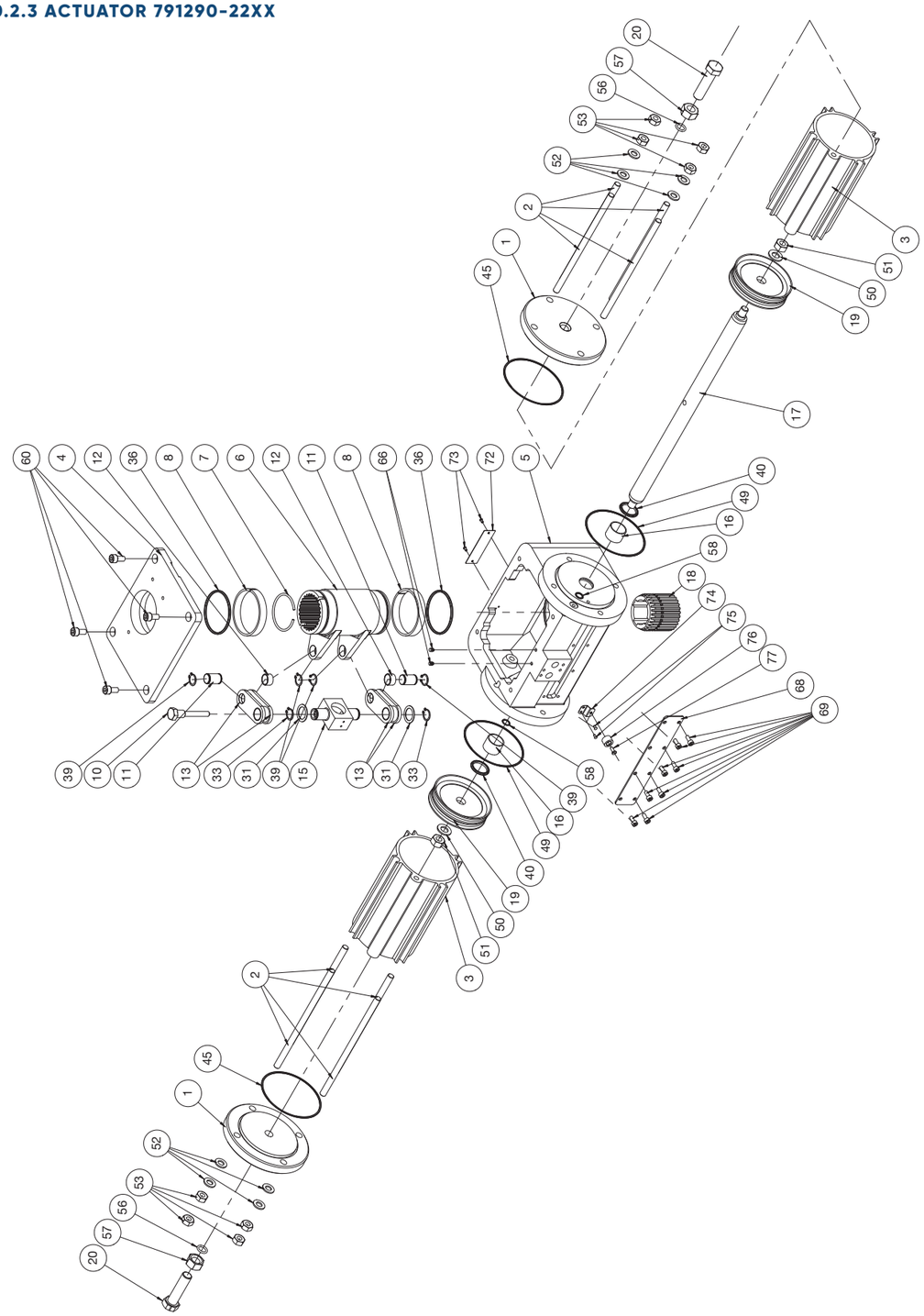

BILL OF MATERIAL AND RECOMMENDED SPARE PARTS KITS FOR ACTUATOR 791290-22XX

Item no	Description	Qty	Kit A	Kit B	Kit C
1	Cylinder cover	2			1
2	Tie rod	8			4
3	Cylinder	2			1
4	Cover	1			
5	Housing	1			
6	Lever	1			
7	Circlip for sleeve	1			
8	Bearing for lever	2	2	2	
10	Pin	1		1	
11	Pivot pin	2		2	
12	Pivot pin bearing	2		2	
13	Link incl. bearing	4		2	
15	Coupling	1			
16	Bearing for piston rod	2			
17	Piston rod	1			
18	Sleeve				
19	Piston	2	2	2	
20	Stop screw	2			1
31	Washer	2		2	
31	Washer	2		2	
33	Circlip	2		2	

Item no	Description	Qty	Kit A	Kit B	Kit C
36	O-ring	2	2	2	
39	Circlip	4		4	
43	Piston rod sealing	2	2		
45	O-ring	2	2	2	1
49	O-ring	2	2	2	1
50	Washer	2			
51	Nut	2			
52	Washer	8			4
53	Nut	8			4
56	O-ring	2	2	2	1
57	Nut	2	2	2	1
58	O-ring	2	2	2	
60	Screw	4		4	
68	Window	1			
69	Screw	8			
72	Name plate	1			
73	Rivet	2			
74	Mounting plate	1			
75	Rivet	2			
76	Sensor body	1			
77	Screw	1			

Complete service kit, (kit A): Recommended parts to be replaced during normal maintenance
Complete overhaul kit, (kit B): Recommended parts to be replaced at a complete overhaul
Complete cylinder, (kit C): Replacement of damaged cylinder, (piston not included)

10.2.4 ACTUATOR 791290-32XX

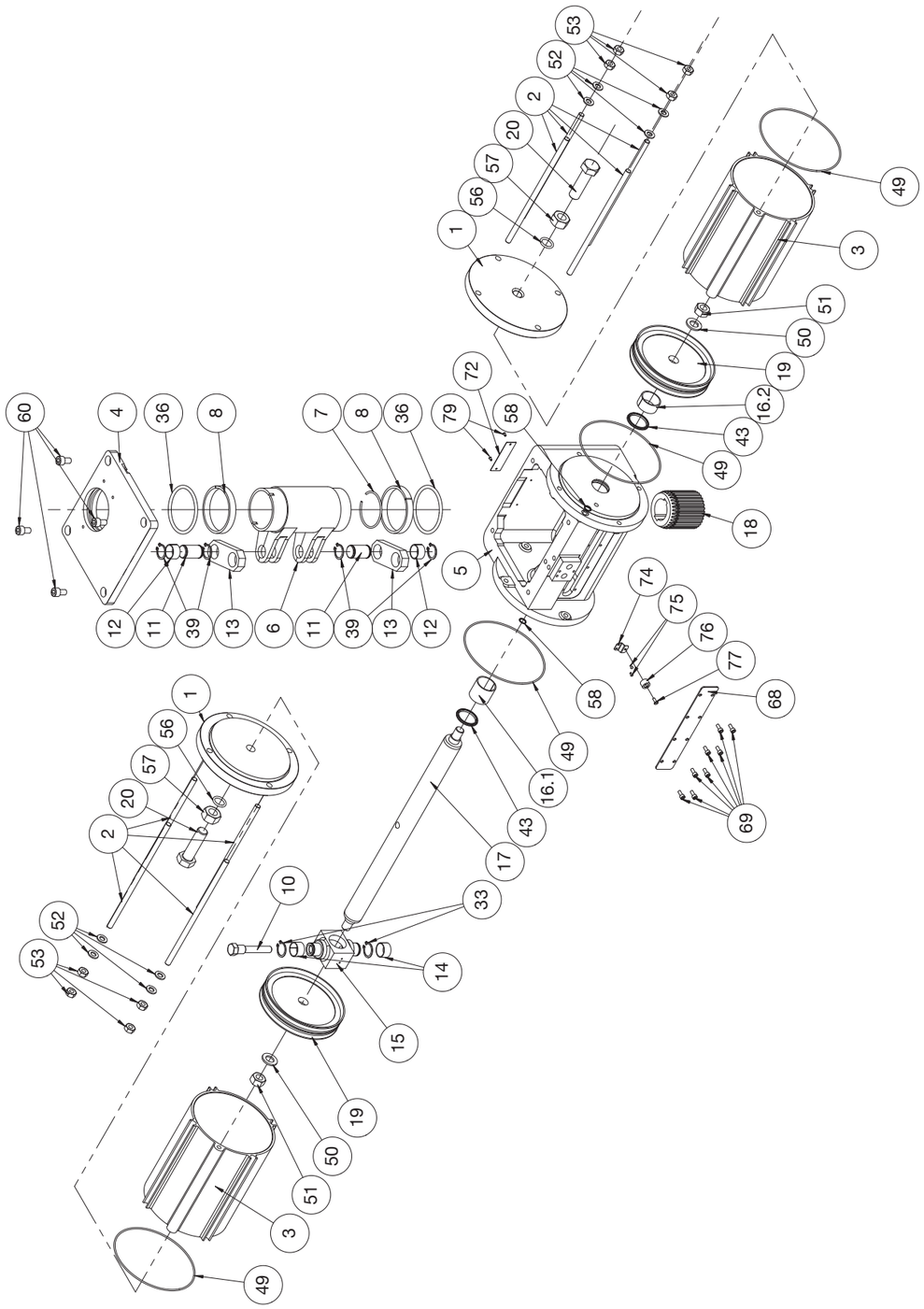

BILL OF MATERIAL AND RECOMMENDED SPARE PARTS KITS FOR ACTUATOR 791290-32XX

Item no	Description	Qty	Kit A	Kit B	Kit C
1	Cylinder cover	2			1
2	Tie rod	8			4
3	Cylinder	2			1
4	Cover	1			
5	Housing	1			
6	Lever	1			
7	Circlip for sleeve	1			
8	Bearing for lever	2	2	2	
10	Pin	1			
11	Pivot pin	2			
12	Pivot pin bearing	4		4	
13	Link	2		2	
14	Bearing for link				
15	Coupling	1			
16.1	Bearing for piston rod	1		1	
16.2	Bearing for piston rod	1		1	
17	Piston rod	1			
18	Sleeve				
19	Piston	2	2	2	
20	Stop screw	2			1

Item no	Description	Qty	Kit A	Kit B	Kit C
36	O-ring	2	2	2	
39	Circlip	4		4	
43	Piston rod sealing	2	2	2	
49	O - ring	4	4	4	2
50	Washer	2			
51	Nut	2			
52	Washer	8			4
53	Nut	8			4
56	O - ring	2	2	2	1
57	Nut	2	2	2	1
58	O-ring	2	2	2	
60	Screw	4		4	
68	Window	1			
69	Screw	8			
72	Name plate	1			
73	Rivet	2			
74	Mounting plate	1			
75	Rivet	2			
76	Sensor body	1			
77	Screw	1			

Complete service kit, (kit A): Recommended parts to be replaced during normal maintenance
Complete overhaul kit, (kit B): Recommended parts to be replaced at a complete overhaul
Complete cylinder, (kit C): Replacement of damaged cylinder, (piston not included)

10.2.5 ACTUATOR 791390-42XX

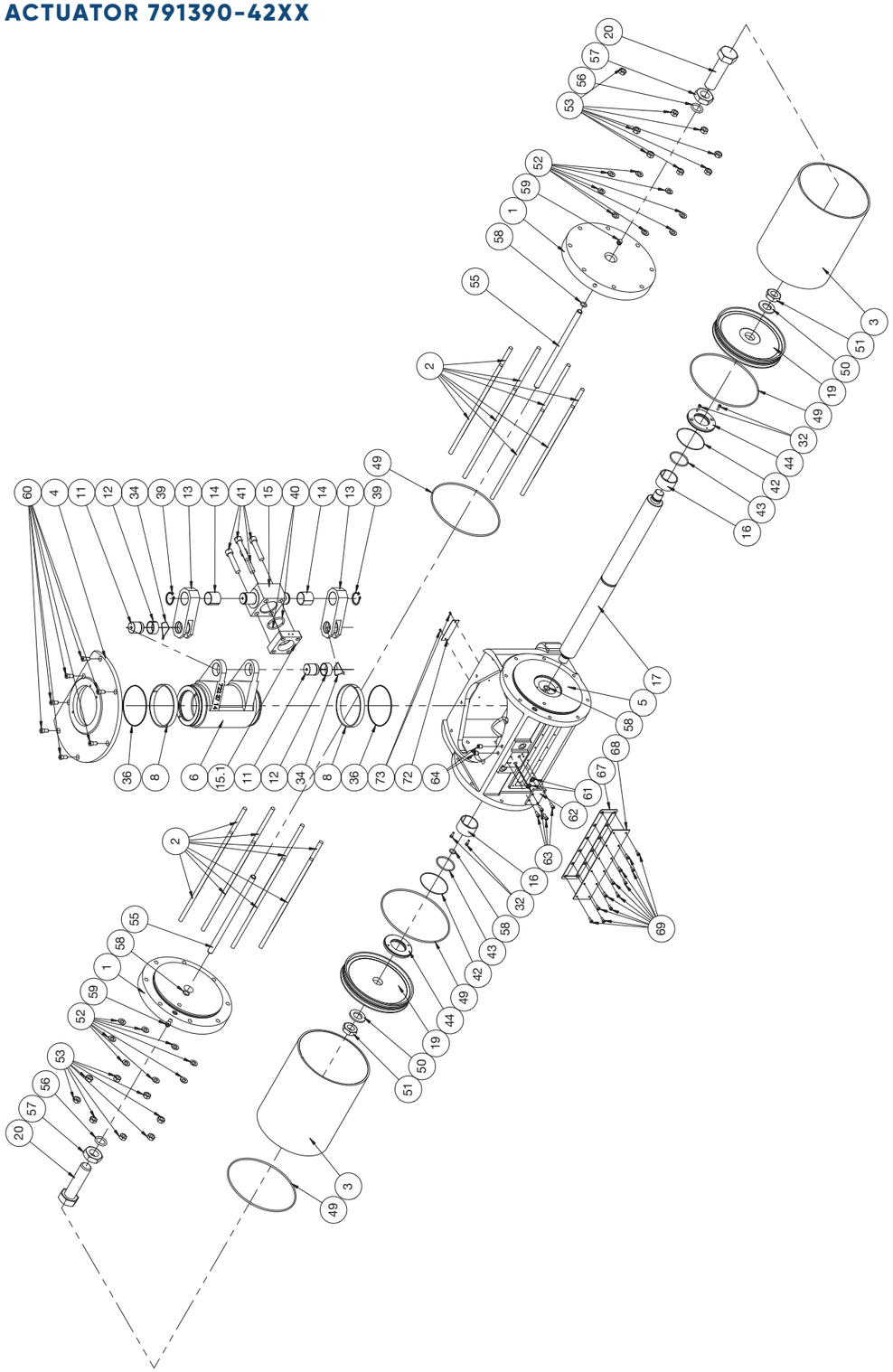

BILL OF MATERIAL AND RECOMMENDED SPARE PARTS KITS FOR ACTUATOR 791390-42XX

Item no	Description	Qty	Kit A	Kit B	Kit C
1	Cylinder cover	2			1
2	Tie rod	16			8
3	Cylinder	2			1
4	Cover	1			
5	Housing	1			
6	Lever	1			
8	Bearing for lever	2	2	2	
11	Pivot pin	2			
12	Pivot pin bearing	2		2	
13	Link	2			
14	Bearing for link	2		2	
15	Coupling	1			
15.1	Coupling re- tainer	1			
16	Bearing for piston rod	2		2	
17	Piston rod	1			
19	Piston	2	2	2	
20	Stop screw	2			1
32	Screw	4	4	4	
34	Pivot pin clamp	2		2	
36	O-ring	2	2	2	
39	Circlip	2		2	
40	Locking segment	2			
41	Screw	4			

Item no	Description	Qty	Kit A	Kit B	Kit C
42	O-ring	2	2	2	
43	Piston rod sealing	2	2	2	
44	Seal holder	2	2	2	
49	O-ring	4	4	4	2
50	Washer	2			
51	Nut	2			
52	Washer	16			8
53	Nut	16			8
55	Air pipe	2			1
56	O-ring	2	2	2	1
57	Nut	2	2	2	1
58	O-ring	4	4	4	2
59	Set screw	2			1
60	Screw	7			
61	O-ring	2	2	2	
62	Blind plate	1			
63	Screw	4			
64	Screw	2			
67	Gasket	1			
68	Cover plate	1			
69	Screw	12			
72	Name plate	1			
73	Rivet	2			

Complete service kit, (kit A): Recommended parts to be replaced during normal maintenance
Complete overhaul kit, (kit B): Recommended parts to be replaced at a complete overhaul
Complete cylinder, (kit C): Replacement of damaged cylinder, (piston not included)

10.2.6 ACTUATOR 791390-45XX

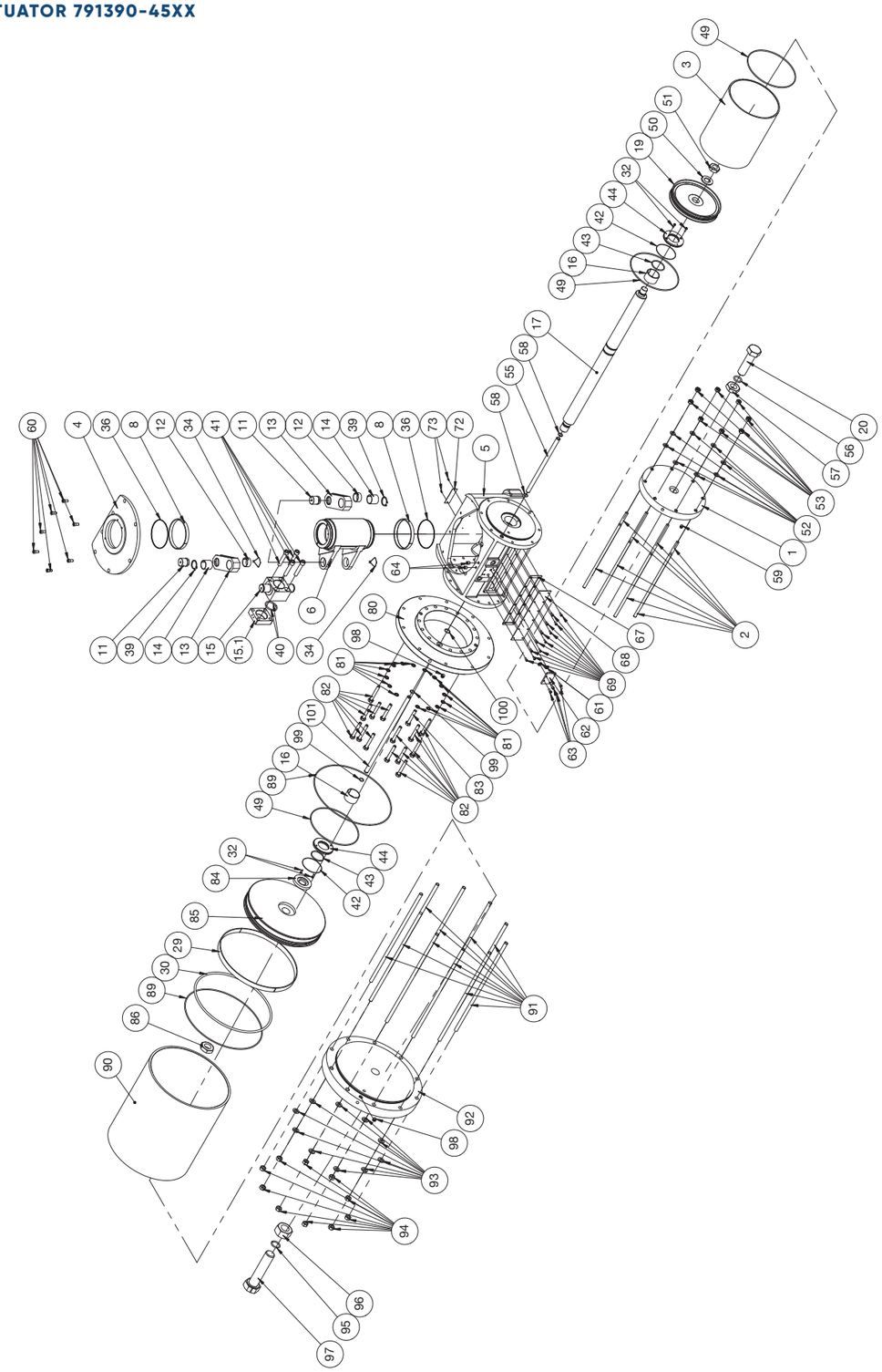

BILL OF MATERIAL AND RECOMMENDED SPARE PARTS KITS FOR ACTUATOR 791390-45XX

Item no	Description	Qty	Kit A	Kit B	Kit C	
					Side A	Side B
1	Cylinder cover	1			1	
2	Tie rod	8			8	
3	Cylinder	1			1	
4	Cover	1				
5	Housing	1				
6	Lever	1				
8	Bearing for lever	2	2	2		
11	Pivot pin	2				
12	Pivot pin bearing	2		2		
13	Link	2				
14	Bearing for link	2		2		
15	Coupling	1				
15.1	Coupling retainer	1				
16	Bearing for piston rod	2		2		
17	Piston rod	1				
19	Piston	1	1	1		
20	Stop screw	1			1	
29	Piston guide ring	1	1	1		
30	Piston seal	1	1	1		
32	Screw	4				
34	Pivot pin clamp	2		2		
36	O-ring	2	2	2		
39	Circlip	2				
40	Locking segment	2				
41	Screw	4				
42	O-ring	2	2	2		
43	Piston rod sealing	2	2	2		
44	Seal holder	2				
49	O-ring	3	3	3	2	
50	Washer	1				
51	Nut	1				
52	Washer	8			8	
53	Nut	8			8	
55	Air pipe	1			1	
56	O-ring	1	1	1	1	

Item no	Description	Qty	Kit A	Kit B	Kit C	
					Side A	Side B
57	Nut	1	1	1	1	
58	O-ring	2	2	2	2	
59	Set screw	1			1	
60	Screw	7				
61	O-ring	2	2	2		
62	Blind plate	1				
63	Screw	4				
64	Screw	2				
67	Gasket	1				
68	Cover plate	1				
69	Screw	12				
72	Name plate	1				
73	Rivet	2				
80	Adapting flange	1				
81	Seal washer	15		15		
82	Screw	14				
83	Screw	1				
84	Adapting washer	1				
85	Piston	1				
86	Nut	1				
88	O-ring	1		1		
89	O-ring	2	2	2		
90	Cylinder	1				1
91	Tie rod	10				10
92	Cylinder cover	1				1
93	Washer	10				10
94	Nut	10				10
95	O-ring	1	1	1		1
96	Nut	1	1	1		1
97	Stop screw	1				1
98	Screw	2				1
99	O-ring	2	2	2		2
100	O-ring	1		1		2
101	Air pipe	1				1

Complete service kit, (kit A): Recommended parts to be replaced during normal
Complete overhaul kit, (kit B): Recommended parts to be replaced at a complete overhaul
Complete small cylinder, (kit C, side A): Replacement of damaged cylinder, (piston not included)
Complete large cylinder, (kit C, side B): Replacement of damaged cylinder, (piston not included)

10.2.7 ACTUATOR 791390-52XX

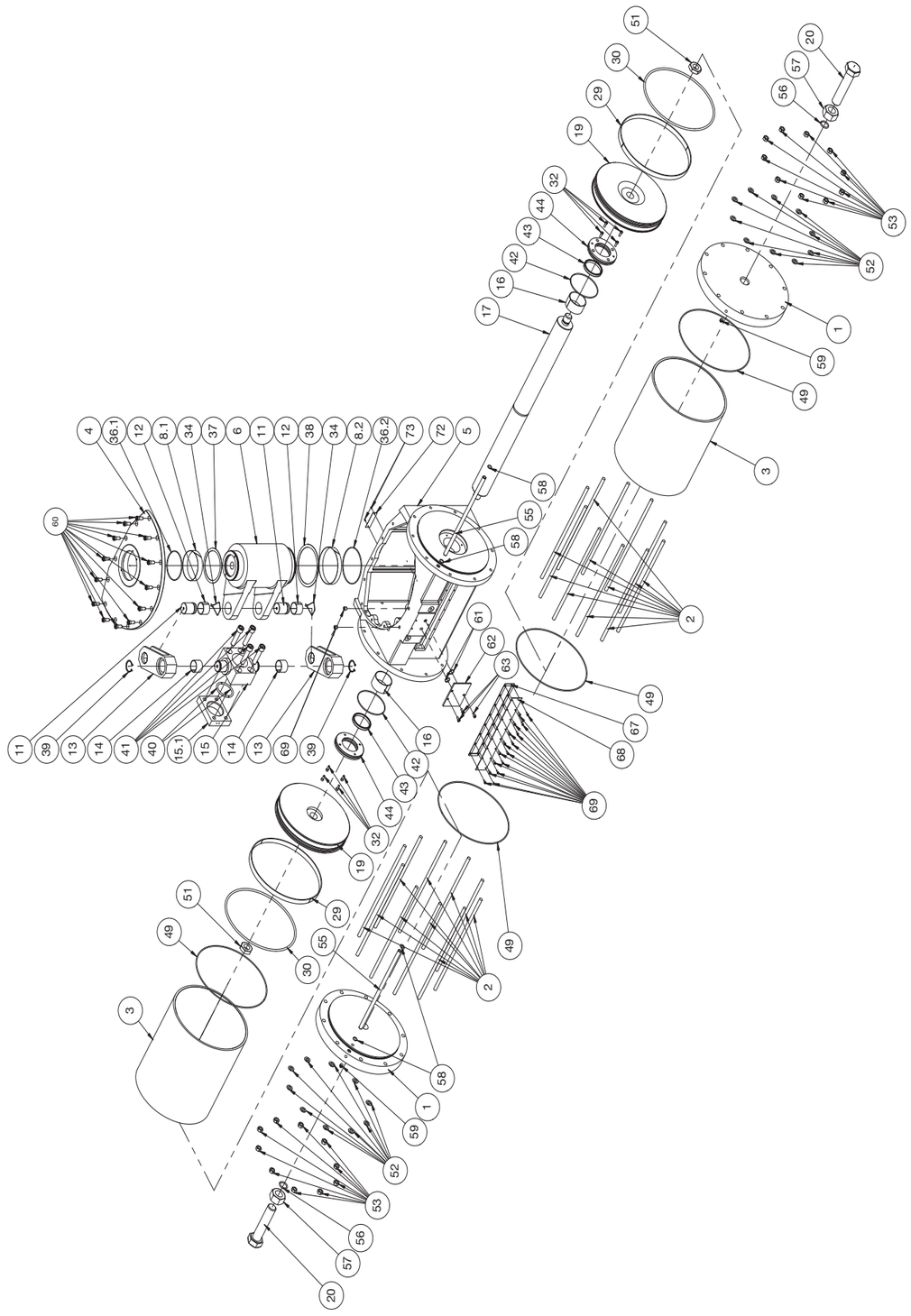

BILL OF MATERIAL AND RECOMMENDED SPARE PARTS KITS FOR ACTUATOR 791390-52XX

Item no	Description	Qty	Kit A	Kit B	Kit C
1	Cylinder cover	2			1
2	Tie rod	20			10
3	Cylinder	2			1
4	Cover	1			
5	Housing	1			
6	Lever	1			
8.1	Bearing, lever upper	1	1	1	
8.2	Bearing, ever lower	1	1	1	
11	Pivot pin	2			
12	Pivot pin bearing	2		2	
13	Link	2			
14	Bearing for link	2		2	
15	Coupling	1			
15.1	Coupling retainer	1			
16	Bearing, piston rod	2		2	
17	Piston rod	1			
19	Piston	2			
20	Stop screw	2			1
29	Guide ring	4	4	4	
30	O-ring	2	2	2	
32	Screw	8	8	8	
34	Pivot pin clamp	2		2	
36,1	O-ring	1	1	1	
36,2	O-ring	1	1	1	
37	Thrust bearing upper	1	1	1	
38	Thrust bearing lower	1	1	1	

Item no	Description	Qty	Kit A	Kit B	Kit C
39	Circlip	2			
40	Locking segment	2			
41	Screw	4			
42	O-ring	2	2	2	
43	Piston rod sealing	2	2	2	
44	Seal holder	2	2	2	
49	O-ring	4	4	4	2
51	Nut	2			
52	Washer	20			10
53	Nut	20			10
55	Air pipe	2			1
56	O-ring	2	2	2	1
57	Nut	2	2	2	1
58	O-ring	4	4	4	2
59	Set screw	2			1
60	Screw	13			
61	O-ring	2	2	2	
62	Blind plate	1			
63	Screw	3			
64	Screw	2			
67	Gasket	1			
68	Cover plate	1			
69	Screw	16			
72	Name plate	1			
73	Rivet	2			

Complete service kit, (kit A): Recommended parts to be replaced during normal maintenance
Complete overhaul kit, (kit B): Recommended parts to be replaced at a complete overhaul
Complete cylinder, (kit C): Replacement of damaged cylinder, (piston not included)

10.3 BILL OF MATERIALS AND RECOMMENDED SPARE PART KITS SPRING RETURN ACTUATORS

10.3.1 ACTUATOR 791392/94-02XX

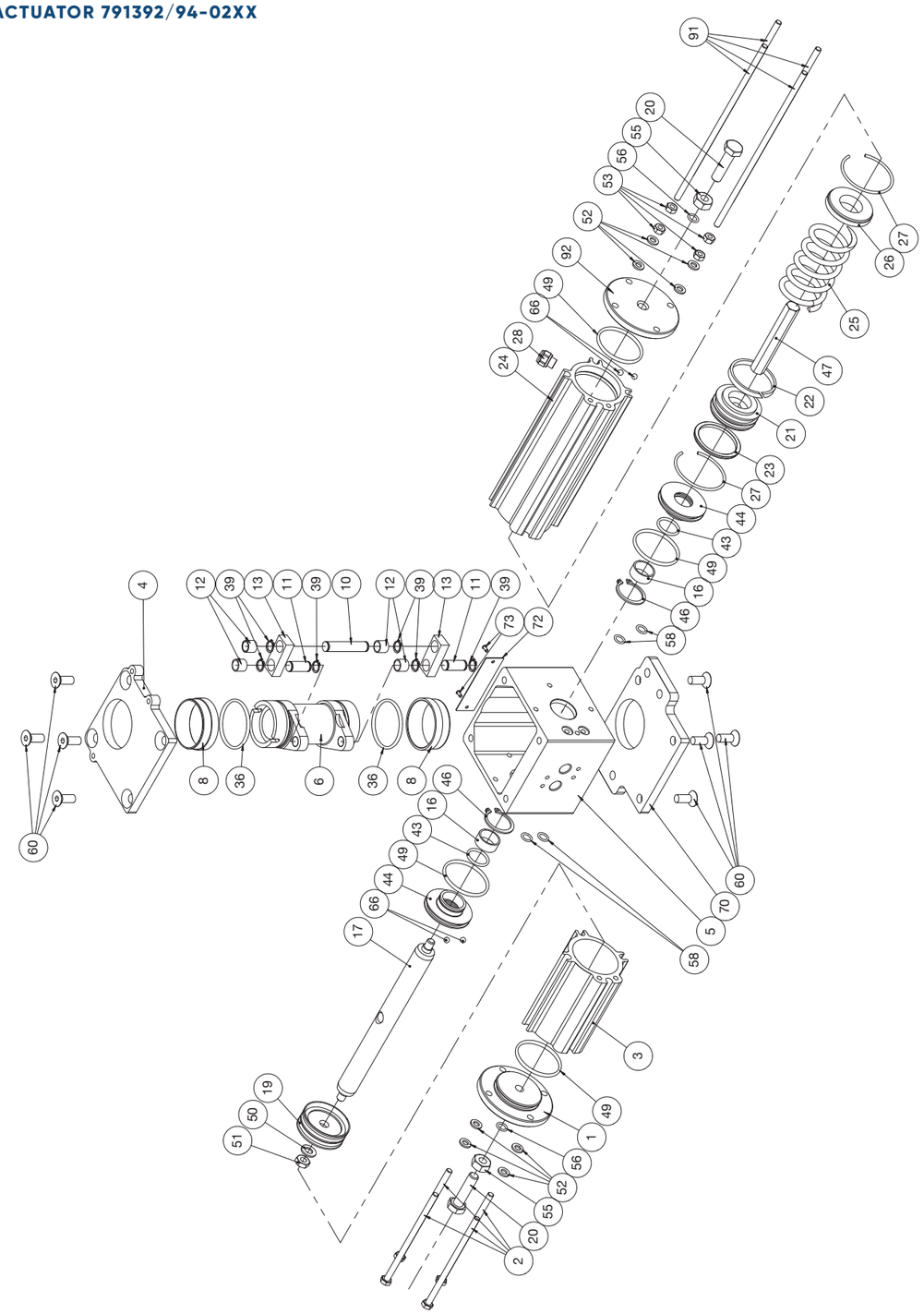

BILL OF MATERIAL AND RECOMMENDED SPARE PARTS KITS FOR ACTUATOR 791392/94-02XX

Item no	Description	Qty	Kit A	Kit B	Kit C	Kit D
1	Cylinder cover	1			1	
2	Screw	4			4	
3	Cylinder	1			1	
4	Cover	1				
5	Housing	1				
6	Lever	1				
8	Bearing for lever	2	2	2		
10	Pin	1		1		
11	Pivot pin	2		2		
12	Pivot pin bearing	4		4		
13	Link	2		2		
16	Bearing for piston rod	2		2		
17	Piston rod	1				
19	Piston	1	1	1		
20	Stop screw	2			1	1
21	Spring piston	1				1
22	Bearing for spring piston	1	1	1		1
23	Seal	1	1	1		1
24	Spring cylinder	1				1
25	Spring	1				1
26	Inner cover	1				1
27	Circlip	2				2

Item no	Description	Qty	Kit A	Kit B	Kit C	Kit D
28	Filter	1				1
36	O-ring	2	2	2		
39	Circlip	6		6		
43	Piston rod sealing	2	2	2		
44	Seal holder	2		2		
46	Circlip	2		2		
47	Piston rod nut	1				1
49	O-ring	4	4	4	2	1
50	Washer	1				
51	Nut	1				
52	Washer	8			4	4
53	Nut	4				8
55	Nut	2			1	1
56	O-ring	2	2	2	1	1
58	O-ring	4	4	4		2
60	Screw	8				
70	Base plate	1				
72	Name plate	1				
73	Rivet	2				
91	Tie rod	4				1
92	Cylinder cover	1				1

Complete service kit, (kit A): Recommended parts to be replaced during normal maintenance
Complete overhaul kit, (kit B): Recommended parts to be replaced at a complete overhaul
Complete cylinder, (kit C): Replacement of damaged air cylinder, (piston not included)
Complete spring return cylinder, (kit D): Replacement of damaged spring return cylinder

10.3.2 ACTUATOR 791292/94-12XX

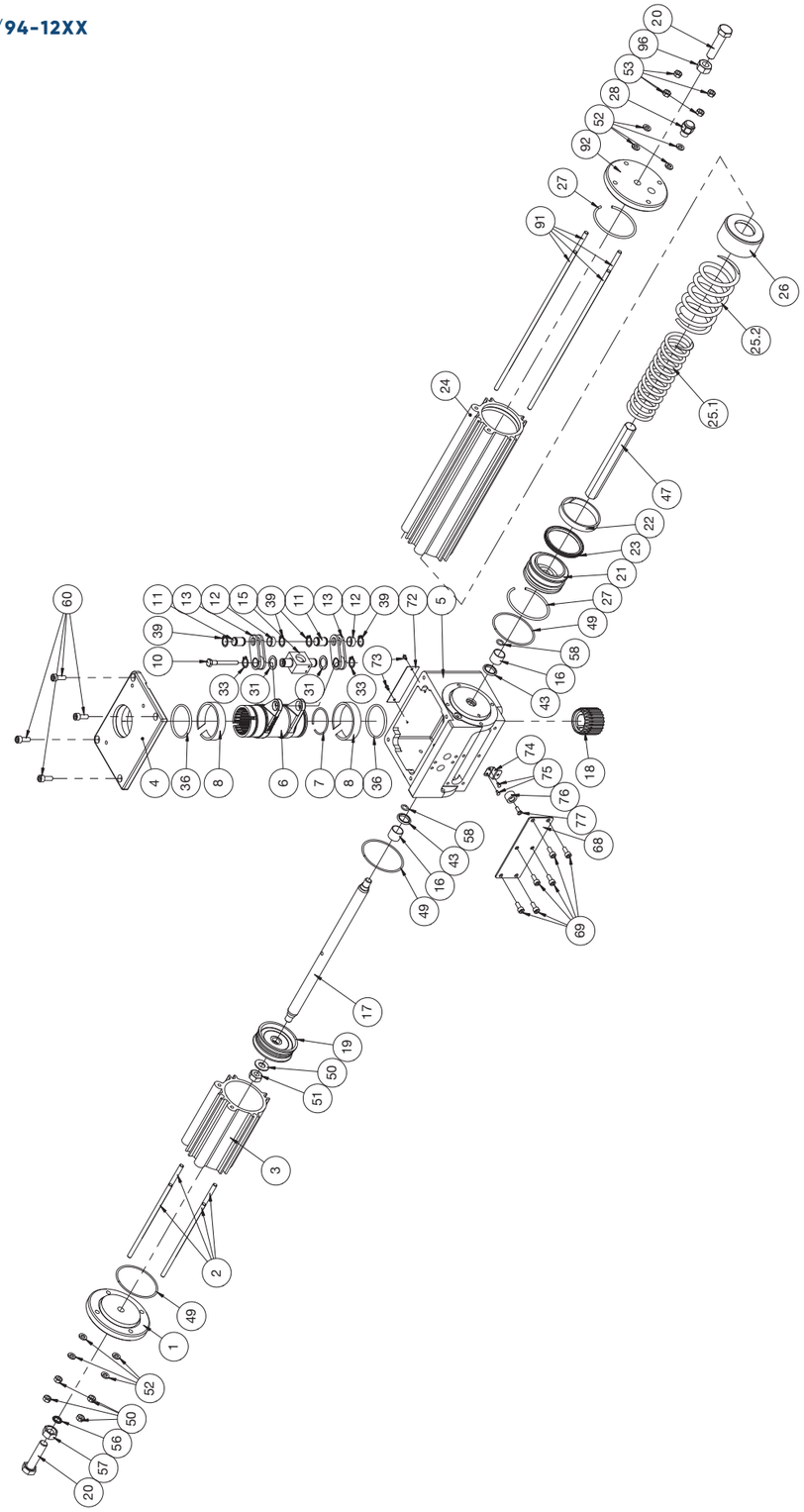

BILL OF MATERIAL AND RECOMMENDED SPARE PARTS KITS FOR ACTUATOR 791292/94-12XX

Item no	Description	Qty	Kit A	Kit B	Kit C	Kit D
1	Cylinder cover	1			1	
2	Tie rod	4			4	
3	Cylinder	1			1	
4	Cover	1				
5	Housing	1				
6	Lever	1				
7	Circlip	1				
8	Bearing for lever	2	2	2		
10	Pin	1		1		
11	Pivot pin	2		2		
12	Pivot pin bearing	2		2		
13	Link incl. Bearing	2		2		
15	Coupling	1				
16	Bearing for piston rod	2		2		
17	Piston rod	1				
18	Sleeve	1				
19	Piston	1	1	1		
20	Stop screw	1			1	1
21	Spring piston	1		1		1
22	Bearing for spring piston	1	1	1		1
23	Seal	1	1	1		1
24	Spring cylinder	1		1		1
25.1	Spring	1		1		1
25.2	Spring	1		1		1
26	Inner cover	1		1		1
27	Circlip	2		2		2
28	Filter	1				1

Item no	Description	Qty	Kit A	Kit B	Kit C	Kit D
31	Washer	2		2		
33	Circlip	2		2		
36	O - ring	2	2	2		
39	Circlip	4		4		
43	Piston rod sealing	2	2	2		
47	Piston rod nut	1				1
49	O-ring	3	3	1	2	1
50	Washer	1				
51	Nut	1				
52	Washer	8			4	4
53	Nut	8				8
56	O-ring	1	1	1	4	
57	Seal stop nut	1	1	1	1	
58	O-ring	2	2	1	1	1
60	Screw	4		4		
68	Window	1				
69	Screw	6				
72	Name plate	1				
73	Rivet	2				
74	Mounting plate	1				
75	Rivet	2				
76	Sensor body	1				
77	Screw	1				
91	Tie rod	4				4
92	End spring return	1				1
96	Nut	1				1

Complete service kit, (kit A): Recommended parts to be replaced during normal maintenance
Complete overhaul kit, (kit B): Recommended parts to be replaced at a complete overhaul
Complete cylinder, (kit C): Replacement of damaged air cylinder, (piston not included)
Complete spring return cylinder, (kit D): Replacement of damaged spring return cylinder

10.3.3 ACTUATOR 791292/94-22XX

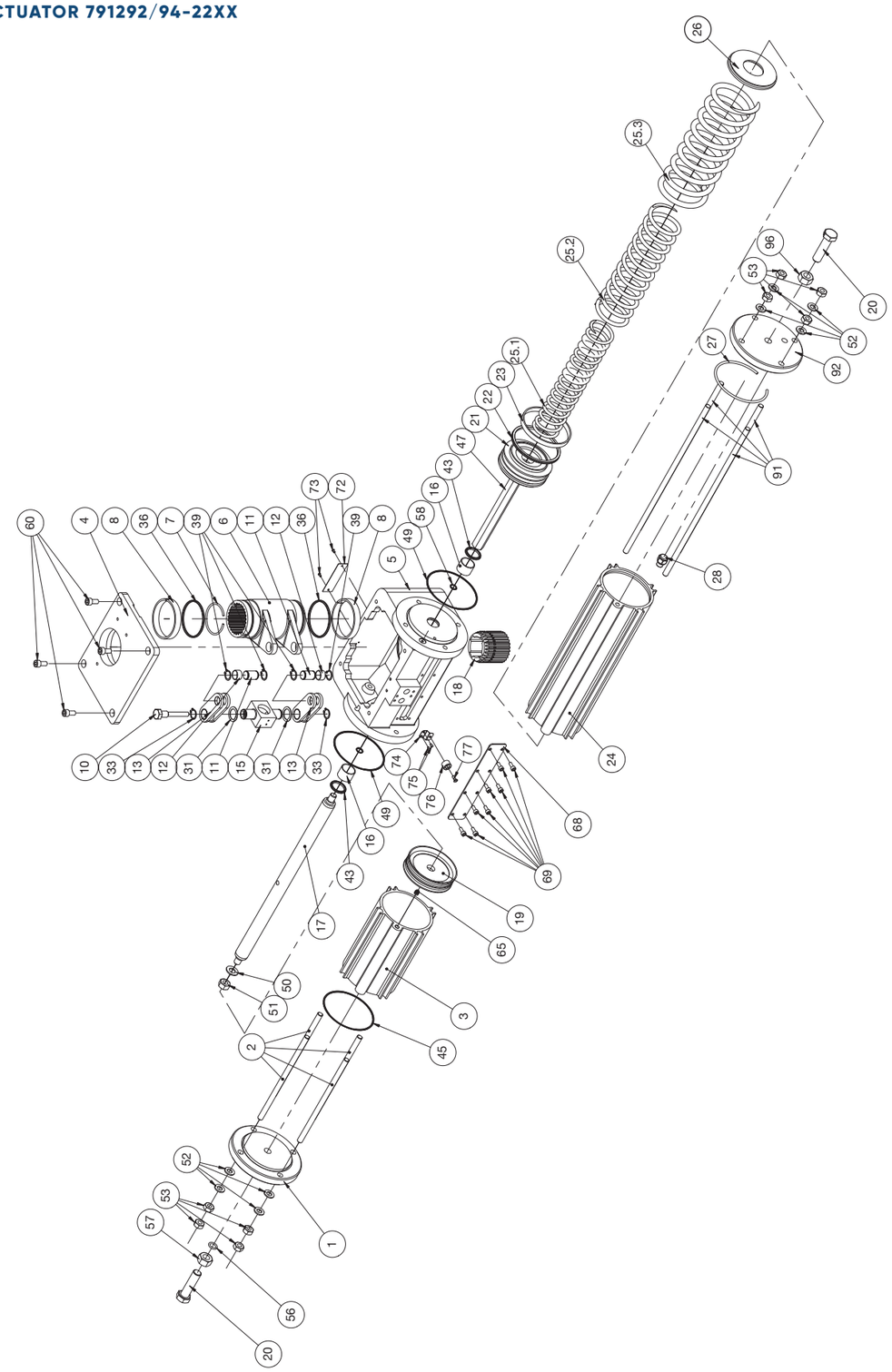

BILL OF MATERIAL AND RECOMMENDED SPARE PARTS KITS FOR ACTUATOR 791292/94-22XX

Item no	Description	Qty	Kit A	Kit B	Kit C	Kit D
1	Cylinder cover	1			1	
2	Tie rod	4			4	
3	Cylinder	1			1	
4	Cover	1				
5	Housing	1				
6	Lever	1				
7	Circlip	1				
8	Bearing for lever	2	2	2		
10	Pin	1		1		
11	Pivot pin	2		2		
12	Pivot pin bearing	2		2		
13	Link incl. Bearing	2		2		
15	Coupling	1				
16	Bearing for piston rod	2		2		
17	Piston rod	1				
18	Sleeve	1				
19	Piston	1	1	1		
20	Stop screw	2			1	1
21	Spring pis- ton	1		1		1
22	Bearing for spring piston	1	1	1		1
23	Seal	1	1	1		1
24	Spring cyl- inder	1				1
25.1	Spring	1		1		1
25.2	Spring	1		1		1
25.3	Spring	1		1		1
26	Inner cover	1		1		1
27	Circlip	2		2		2
28	Filter	1				1

Item no	Description	Qty	Kit A	Kit B	Kit C	Kit D
31	Washer	2		2		
33	Circlip	2		2		
36	O-ring	2	2	2		
39	Circlip	4		4		
43	Piston rod sealing	2	2	2		
45	O-ring	1	1	1	1	
47	Spacer nut	1				1
49	O-ring	2	2	2	1	1
50	Nut M6	1				
51	Washer	1				
52	Washer	8			4	4
53	Nut	8			4	8
56	O-ring	1	1	1	1	
57	Nut	2	1	1	1	1
58	O-ring	2	2	2		1
60	Screw	4		4		
68	Window	1				
69	Screw	8				
72	Name plate	1				
73	Rivet	2				
74	Mounting plate	1				
75	Rivet	2				
76	Sensor body	1				
77	Screw	1				
91	Tie rod	4				4
92	Cylinder cover	1				1
96	Nut	1				1

Complete service kit, (kit A): Recommended parts to be replaced during normal maintenance
Complete overhaul kit, (kit B): Recommended parts to be replaced at a complete overhaul
Complete cylinder, (kit C): Replacement of damaged air cylinder, (piston not included)
Complete spring return cylinder, (kit D): Replacement of damaged spring return cylinder

10.3.4 ACTUATOR 791292/94-32XX

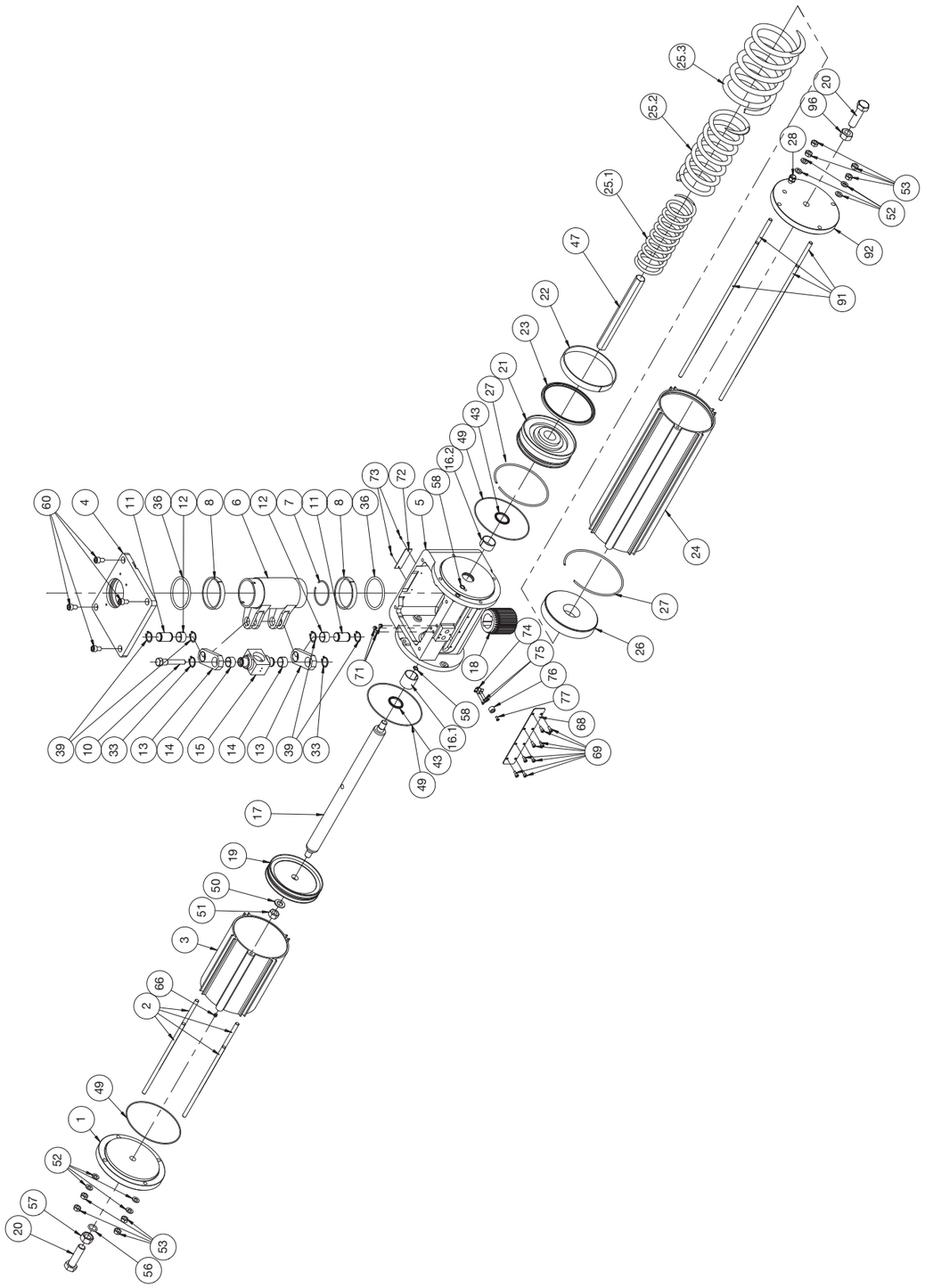

BILL OF MATERIAL AND RECOMMENDED SPARE PARTS KITS FOR ACTUATOR 791292/94-32XX

Item no	Description	Qty	Kit A	Kit B	Kit C	Kit D
1	Cylinder cover	1			1	
2	Tie rod	4			4	
3	Cylinder	1			1	
4	Cover	1				
5	Housing	1				
6	Lever	1				
7	Circlip	1				
8	Bearing for lever	2	2	2		
10	Pin	1				
11	Pivot pin	2				
12	Pivot pin bearing	2		2		
13	Link	2		2		
14	Bearing for link	2		2		
15	Coupling	1				
16.1	Bearing for piston rod	1		1		
16.2	Bearing for piston rod	1		1		
17	Piston rod	1				
18	Sleeve	1				
19	Piston	1	1	1		
20	Stop screw	2			1	1
21	Spring piston	1		1		1
22	Bearing for spring piston	1	1	1		1
23	Seal	1	1	1		1
24	Spring cylinder	1				1
25.1	Spring	1		1		1
25.2	Spring	1		1		1
25.3	Spring	1		1		1
26	Inner cover	1		1		1

Item no	Description	Qty	Kit A	Kit B	Kit C	Kit D
27	Circlip	2		2		2
28	Filter	1				1
33	Circlip	2		2		
36	O - ring	2	2	2		
39	Circlip	4		2		
43	Piston rod sealing	2	2	2		
47	Piston rod nut	1				1
49	O-ring	3	3	3	2	1
50	Washer	1				
51	Nut	1				
52	Washer	8			4	4
53	Nut	8			4	8
56	O-ring	1	1	1	1	
57	Seal stop nut	1	1	1	1	
58	O-ring	2	2	2		1
60	Screw	4		4		
68	Window	1				
69	Screw	8				
72	Name plate	1				
73	Rivet	2				
74	Mounting plate	1				
75	Rivet	2				
76	Sensor body	1				
77	Screw	1				
91	Tie rod	4				4
92	End spring return	1				1
96	Nut	1				1

Complete service kit, (kit A): Recommended parts to be replaced during normal maintenance
Complete overhaul kit, (kit B): Recommended parts to be replaced at a complete overhaul
Complete cylinder, (kit C): Replacement of damaged air cylinder, (piston not included)
Complete spring return cylinder, (kit D): Replacement of damaged spring return cylinder

10.3.5 ACTUATOR 791392/94-42XX

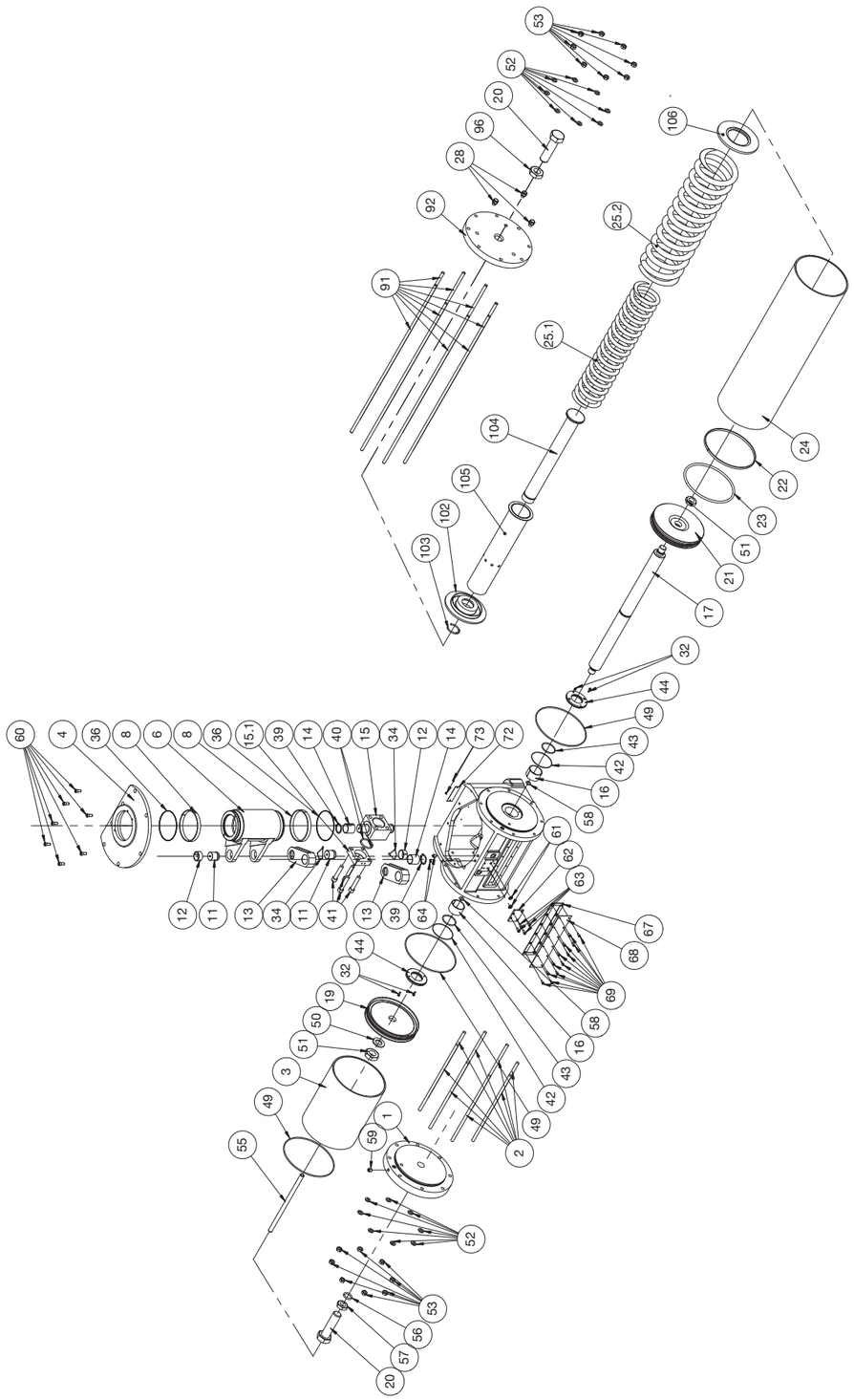

BILL OF MATERIAL AND RECOMMENDED SPARE PARTS KITS FOR ACTUATOR 791392/94-42XX

Item no	Description	Qty	Kit A	Kit B	Kit C
1	Cylinder cover	1			
2	Tie rod	8			
3	Cylinder	1			
4	Cover	1			
5	Housing	1			
6	Lever	1			
8	Bearing for lever	2	2	2	2
11	Pivot pin	2			
12	Pivot pin bearing	2		2	
13	Link	2			
14	Bearing for link	2		2	
15	Coupling	1			
15.1	Coupling retainer	1			
16	Bearing for piston rod	2		2	
17	Piston rod	1			
19	Piston	1	1	1	
20	Stop screw	1			
21	Spring piston	1			
22	Bearing for spring piston	1	1	1	
23	Seal	1	1	1	
24	Spring cylinder	1			
25.1	Spring	1			
25.2	Spring	1			
28	Filter	3			
32	Screw	4	4		4
34	Pivot pin clamp	2		2	
36	O-ring	2	2	2	2
39	Circlip	2		2	
40	Locking seg- ment	2			
41	Screw	4			
42	O-ring	2	2	2	2

Item no	Description	Qty	Kit A	Kit B	Kit C
43	Piston rod sealing	2	2	2	2
44	Seal holder	2	2	2	2
49	O-ring	3	3	3	4
50	Washer	1			
51	Nut	2			
52	Washer	16			
53	Nut	16			
55	Air pipe	1			
56	O-ring	1	1	1	
57	Nut	1	1	1	
58	O-ring	2	2	2	4
59	Set screw	1			
60	Screw	7			
61	O-ring	2	2	2	
62	Blind plate	1			
63	Screw	4			
64	Screw	2			
67	Gasket	1			
68	Cover plate	1			
69	Screw	12			
72	Name plate	1			
73	Rivet	2			
91	Tie rod	8			
92	Cylinder cover	1			
96	Nut	1			
102	Spring holder	1			
103	Lock segment	2			
104	Inner casing	1			
105	Outer casing	1			
106	Washer	1			

Complete service kit, (kit A): Recommended parts to be replaced during normal maintenance
Complete overhaul kit, (kit B): Recommended parts to be replaced at a complete overhaul
Complete cylinder, (kit C): Replacement of damaged air cylinder, (piston not included)

10.3.6 ACTUATOR 791392/94-45XX

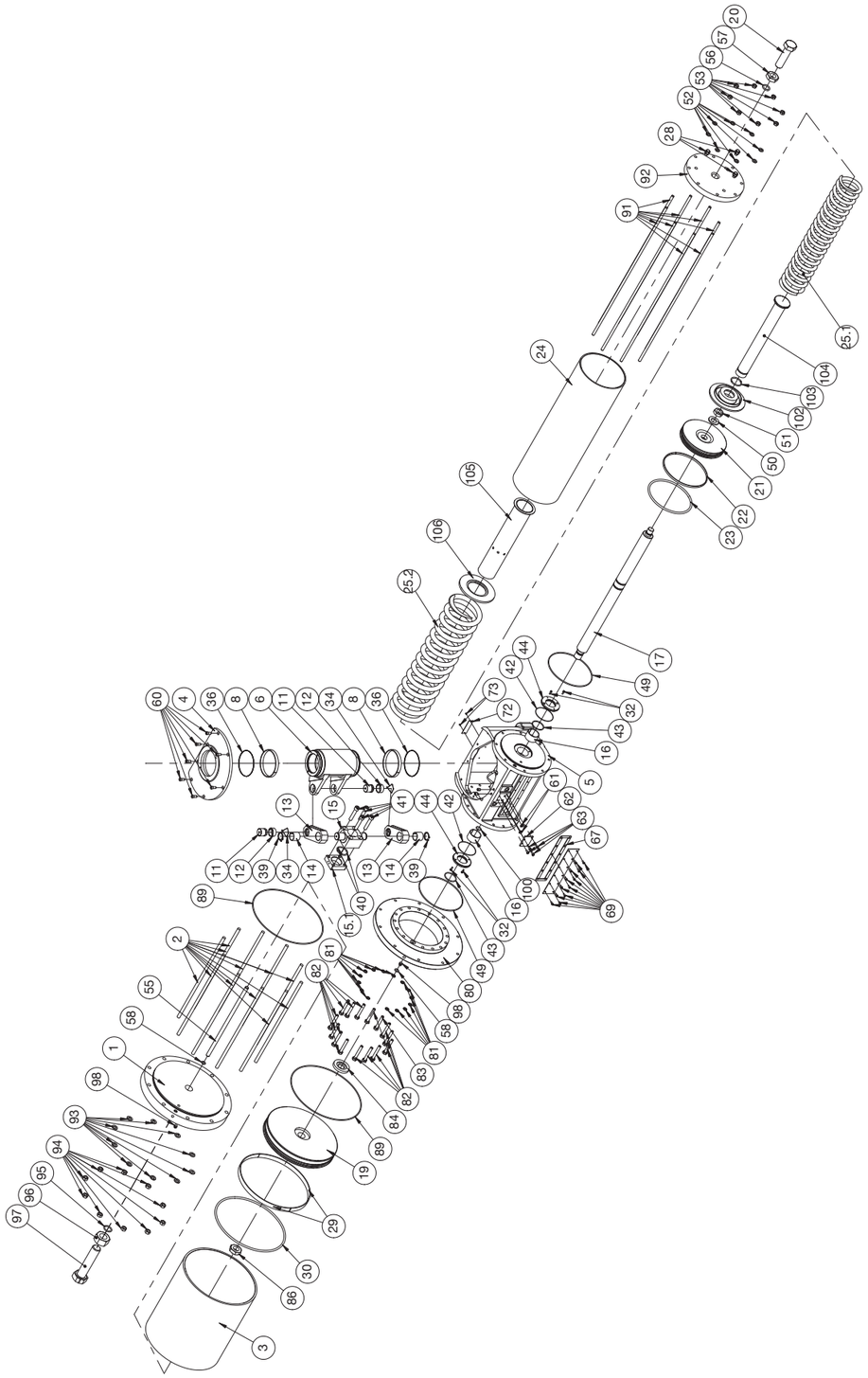

BILL OF MATERIAL AND RECOMMENDED SPARE PARTS KITS FOR ACTUATOR 791392/94-45XX

Item no	Description	Qty	Kit A	Kit B	Kit C
1	Cylinder cover	1			1
2	Tie rod	10			10
3	Cylinder	1			1
4	Cover	1			
5	Housing	1			
6	Lever	1			
8	Bearing for lever	2	2	2	
11	Pivot pin	2			
12	Pivot pin bearing	2		2	
13	Link	2			
14	Bearing for link	2		2	
15	Coupling	1			
15.1	Coupling retainer	1			
16	Bearing piston rod	2		2	
17	Piston rod	1			
19	Piston	1			
20	Stop screw	1			
21	Spring piston	1			
22	Bearing for spring piston	1	1	1	
23	Seal	1	1	1	
24	Spring cylinder	1			
25.1	Spring	1			
25.2	Spring	1			
28	Filter	3			
29	Piston bearing	2	2	2	
30	Piston seal	1	1	1	
32	Screw	4	4	4	
34	Pivot pin clamp	2		2	
36	O-ring	2	2	2	
39	Circlip	2			
40	Lock. Segment	2			
41	Screw	4			
42	O-ring	2	2	2	
43	Piston rod sealing	2	2	2	
44	Seal holder	2	2	2	
49	O-ring	2	2	2	
50	Washer	1			
51	Nut	1			

Item no	Description	Qty	Kit A	Kit B	Kit C
52	Washer	8			
53	Nut	8			
55	Air pipe	1			1
56	O-ring	1	1	1	
57	Nut	1	1	1	
58	O-ring	2	1	1	
60	Screw	7			
61	O-ring	2	2	2	
62	Blind plate	1			
63	Screw	4			
64	Screw	2			
67	Gasket	1			
68	Cover plate	1			
69	Screw	12			
72	Name plate	1			
73	Rivet	2			
80	Adapting flange	1			
81	Seal washer	15		15	
82	Screw	14			
83	Screw	1			
84	Adapting washer	1			
86	Nut	1			
89	O-ring	2	2	2	2
91	Tie rod	8			
92	Cylinder cover	1			
93	Washer	10			10
94	Nut	10			10
95	O-ring	1	1	1	1
96	Nut	1	1	1	1
97	Screw	1			1
98	Screw	2			1
99	O-ring	2	2	2	2
100	O-ring	1		1	
102	Spring holder	1			
103	Lock segment	2			
104	Inner casing	1			
105	Outer casing	1			
106	Washer	1			

Complete service kit, (kit A): Recommended parts to be replaced during normal maintenance
Complete overhaul kit, (kit B): Recommended parts to be replaced at a complete overhaul
Complete cylinder, (kit C): Replacement of damaged air cylinder, (piston not included)

10.3.7 ACTUATOR 791392/94-52XX

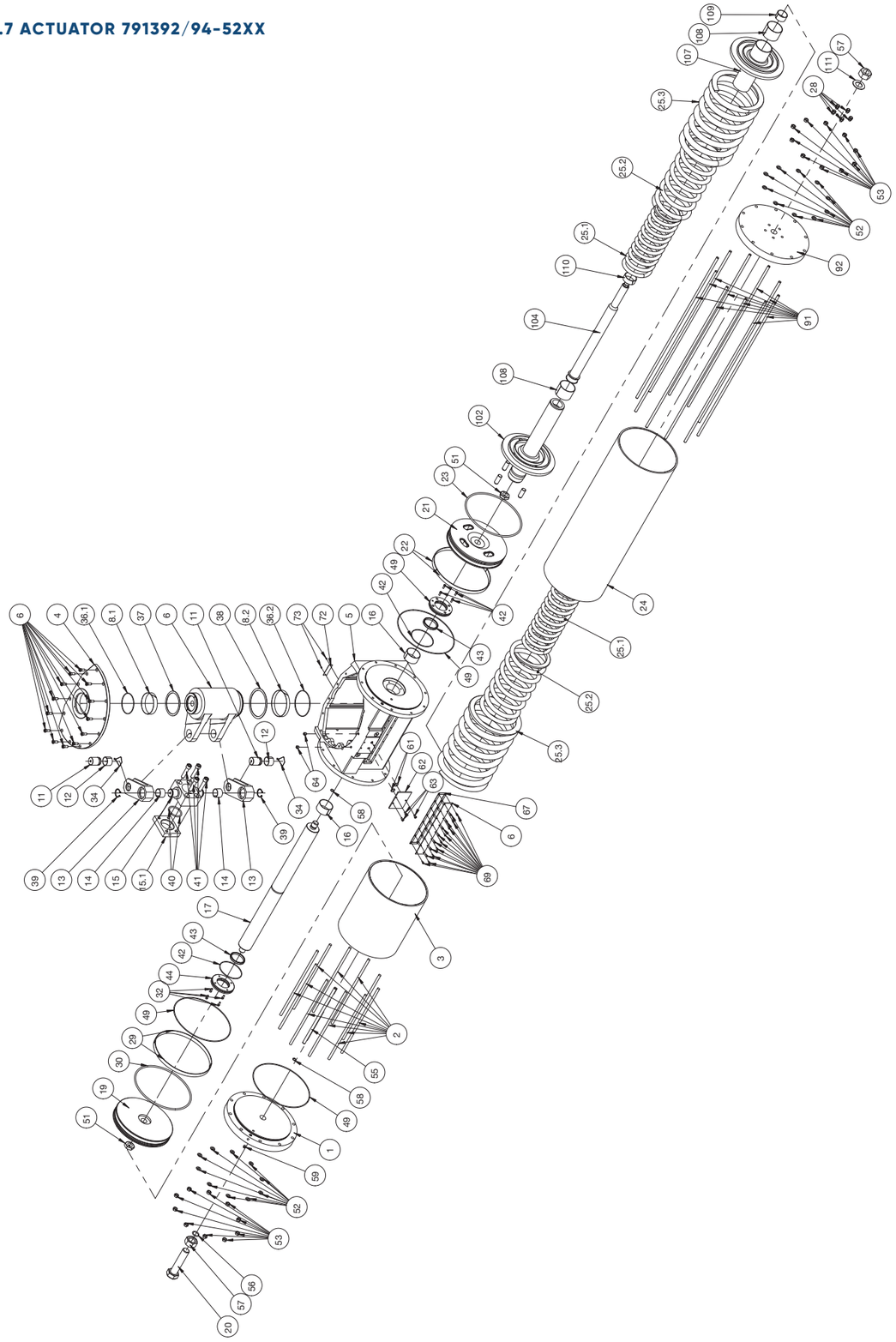

BILL OF MATERIAL AND RECOMMENDED SPARE PARTS KITS FOR ACTUATOR 791392/94-52XX

Item no	Description	Qty	Kit A	Kit B	Kit C
1	Cylinder cover	1			1
2	Tie rod	10			10
3	Cylinder	1			1
4	Cover	1			
5	Housing	1			
6	Lever	1			
8.1	Lever bearing upper	1	1	1	
8.2	Lever bearing lower	1	1	1	
11	Pivot pin	2			
12	Pivot pin bearing	2		2	
13	Link	2			
14	Bearing for link	2		2	
15	Coupling	1			
15.1	Coupling retainer	1			
16	Bearing for piston rod	2		2	
17	Piston rod	1			
19	Piston	1			
20	Stop screw	1			1
21	Spring piston	1			
22	Bearing for spring piston	2	2	2	
23	Seal	1	1	1	
24	Spring cylinder	1			
25.1	Spring	2			
25.2	Spring	2			
25.3	Spring	2			
28	Filter	5			
29	Piston bearing	2	2	2	
30	Piston seal	1	1	1	
32	Screw	8	8	8	
34	Pivot pin clamp	2		2	
36.1	O-ring	1	1	1	
36.2	O-ring	1	1	1	
37	Thrust bearing upper	1	1	1	
38	Thrust bearing lower	1	1	1	
39	Circlip	2		2	

Item no	Description	Qty	Kit A	Kit B	Kit C
40	Lock. Segment	2			
41	Screw	4			
42	O-ring	2	2	2	
43	Piston rod sealing	2	2	2	
44	Seal holder	2	2	2	
49	O-ring	3	3	3	2
51	Nut	2			
52	Washer	20			10
53	Nut	20			10
55	Air pipe	1			1
56	O-ring	1		1	1
57	Nut	1	1	1	1
58	O-ring	2	2	2	2
59	Set screw	1			1
60	Screw	13			
61	O-ring	2		2	
62	Blind plate	1			
63	Screw	3			
64	Screw	2			
67	Gasket	1			
68	Cover plate	1			
69	Screw	16			
72	Name plate	1			
73	Rivet	2			
91	Tie rod	10			
92	Spring end	1			
96	Nut	1			
102	Spring holder	1			
104	Inner casing	1			
107	Spring guide	1			
108	Bushing	2			
109	Bushing	1			
110	Guide ring	1			
111	Washer	1			

Complete service kit, (kit A): Recommended parts to be replaced during normal maintenance
Complete overhaul kit, (kit B): Recommended parts to be replaced at a complete overhaul
Complete cylinder, (kit C): Replacement of damaged air cylinder, (piston not included)

All data, information, statements, photographs and graphic illustrations in this leaflet are without any obligation and raise no liabilities to or form part of any sales contracts of ANDRITZ AG or any affiliates for equipment and/or systems referred to herein. © ANDRITZ AG 2024. All rights reserved. No part of this copyrighted work may be reproduced, modified or distributed in any form or by any means, or stored in any database or retrieval system, without the prior written permission of ANDRITZ AG or its affiliates. Any such unauthorized use for any purpose is a violation of the relevant copyright laws. ANDRITZ AG, Stattegger Strasse 18, 8045 Graz, Austria. NAF ProCap Capping Valve Technical bulletin EN 1.0/2024.

Valve & Automation
Total Valve & Control Solutions®

JOHANNESBURG
Tel: 011 397 2833

DURBAN
Tel: 031 579 2593

South Africa:
0861 103 103

E-mail: sales@valve.co.za
www.valve.co.za

SCAN ME